PL201700055
PL2017-55

EMBASSY SUITES

MINNEAPOLIS, MINNESOTA

PROJECT LOCATION

7901 34TH AVE S,
BLOOMINGTON, MN

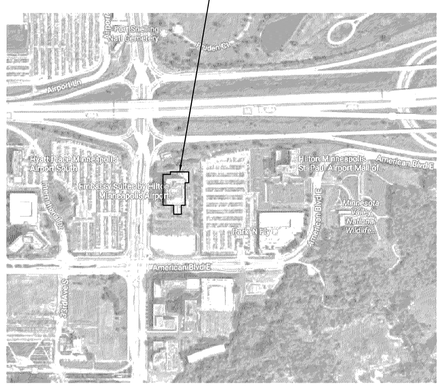

ZONING/CODE INFROMATION

GOVERNING CODES

2012 INTERNATIONAL BUILDING CODE (IBC)
2015 MN STATE MECHANICAL CODE
2016 MN STATE PLUMBING CODE
2014 NATIONAL ELECTRICAL CODE
2012 INTERNATIONAL FIRE CODE
2012 INTL. ENERGY CONSERVATION CODE

PROJECT SCOPE

1. CONVERT THE EXISTING GRAVEL PARKING LOT INTO AN ASPHALT PARKING LOT COMPLYING TO CODE.
2. THE NORTHERN SERVICE DRIVE HAS BE MODIFIED TO PROVIDE PROPER CLEARANCES.
3. THE ADDITION OF A SMALL PATIO OUTSIDE THE RESTAURANT ON THE EASTERN SIDE OF THE EXISTING HOTEL.
4. NEW SITE LIGHTING THROUGHOUT THE SITE, BRINGING THE ENTIER SITE UP TO CODE.
5. THE MAIN ENTRY FROM 34TH STREET HAS BEEN REVISED TO CODE.
6. THE HIKE AND BIKE TRAIL IS ADDED ALONG AMERICAN DRIVE.
7. LANDSCAPE HAS BEEN ADDED ALONG THE PERIMETER AND THE NEW PARKING LOT.

INDEX OF DRAWINGS

A100	COVER
SURVEY	
	BOUNDARY/TOPOGRAPHIC SURVEY
	PRELIMINARY PLAT
	FINAL PLAT.
CIVIL	
C1.00	DEMOLITION PLAN
C2.00	PAVING & DIMENSIONAL CONTROL
C3.00	GRADING PLAN
C4.00	PRE-DEVELOPED DRAINAGE AREA MAP
C4.01	POST-DEVELOPED DRAINAGE AREA MAP
C5.00	WATER PLAN
C6.00	STORM PLAN
C7.00	EROSION CONTROL PLAN
C8.00	CITY STANDARD WATER DETAILS
C8.01	CITY STANDARD STORM DETAILS
C8.02	CITY STANDARD PAVING DETAILS
C8.03	PRIVATE PAVING DETAILS
	DETENTION DRAWINGS 1-6
LANDSCAPE	
PD 1	PLANED DEVELOPMENT SITE PLAN
L101	LANDSCAPE DEMO PLAN
L201	LANDSCAPE SITE PLAN
L301	LANDSCAPE PLANTING PLAN
L302	PLANT LIST & LANDSCAPE DETAILS
MEP	
MEP102	LIGHTING PHOTOMETRIC PLAN - MAINTAINED FOOT-CANDLES
MEP103	LIGHTING PHOTOMETRIC PLAN - INITIAL FOOT-CANDLES

PROJECT DIRECTORY:

ARCHITECT
RICHARD G. CARRELL ARCHITECTURE
5646 MILTON ST. SUITE 888
DALLAS, TX 75206
TEL: 214.953.0042
FAX: 214.953.0702
CONTACT: RICK CARRELL

STRUCTURAL ENGINEERING
RLG INC.
5445 LA SIERRA, SUITE 300, LB-17
DALLAS, TX 75231
TEL: 214.739.8100
FAX: 214.739.6354
CONTACT: DAVID GOODSON

CIVIL ENGINEERING
RLG INC.
5445 LA SIERRA, SUITE 300, LB-17
DALLAS, TX 75231
TEL: 214.739.8100
FAX: 214.739.6354
CONTACT: JARED W. BRATZ

MEP ENGINEERING
BASHARKHAH ENGINEERING
10260 N. CENTRAL EXPRESSWAY, STE 220
DALLAS, TEXAS 75231
TEL: 214.659.9000
FAX: 214.659.9001
CONTACT: SAM BASHARKHAH

LANDSCAPE ARCHITECT
KENDALL + LANDSCAPE ARCHITECTURE.
8150 North Central, Suite 701
Dallas, TX 75206
TEL: 214.739.3226
CONTACT: MICHAEL KENDALL

SURVEY
SAMBATEK.
12800 WHITEWATER DRIVE, SUITE 300
MINNETONKA, MINNESOTA 55343
TEL: 763.476.6010
FAX: 763.476.8532
CONTACT: RICK BLOM

GENERAL NOTES

1. THE CONTRACTOR SHALL VISIT THE PROJECT SITE TO FAMILIARIZE THEMSELVES WITH THE EXISTING CONDITIONS PRIOR TO BID.

2. CONTRACTOR SHALL FIELD VERIFY ALL DIMENSIONS PRIOR TO COMMENCEMENT OF THE WORK AND SHALL NOTIFY THE ARCHITECT OF ANY VARIATION FROM THE DIMENSIONS OR CONDITIONS NOTED ON ALL OF THE DOCUMENTS.

3. CONTRACTOR SHALL NOT RELY ON ANY SCALED MEASUREMENTS ON THE DRAWING IN ABSENCE OF NOTED DIMENSIONS.

4. CONTRACTOR SHALL BE RESPONSIBLE FOR ALL MEANS AND METHODS OF CONSTRUCTION.

5. THE CONTRACTOR IS REQUIRED TO SET UP TEMPORARY (OR PERMANENT) POWER FOR USE DURING CONSTRUCTION BEFORE CONSTRUCTION.

6. THESE DOCUMENT SHALL CONSTITUTE AN INTEGRATED PROJECT. THE GENERAL CONTRACTOR AND ALL SUBCONTRACTORS ARE TO CONSIDER THE DOCUMENTS AS A WHOLE AND TO NOT RELY ON AN INDIVIDUAL SHEET AS THE SOLE LOCATION NECESSARY TO UNDERSTAND THE FULL SCOPE OF THE PROJECT.

7. THESE DRAWINGS DO NOT NECESSARILY INDICATE OR DESCRIBE ALL WORK REQUIRED FOR FULL PERFORMANCE AND COMPLETION OF THE REQUIREMENTS OF THE CONTRACT DOCUMENTS.

8. CONTRACTOR SHALL BE RESPONSIBLE FOR ALL CUTTING, FITTING AND PATCHING THAT MAY BE REQUIRED TO COMPLETE THE WORK.

9. CONTRACTOR SHALL PERFORM TOUCH-UP PAINTING AFTER INSTALLATION OF ITEMS BY OWNER.

10. CONTRACTOR SHALL AT ALL TIMES KEEP THE PREMISES FREE FROM AN ACCUMULATION OF WASTE MATERIALS, OR RUBBISH CAUSED BY DEMOLITION, CONSTRUCTION AND OPERATIONS UNDER THE CONTRACT.

11. CONTRACTOR SHALL PERFORM FINAL CLEANING OF THE ENTIRE BUILDING & SITE ON THE DAY OF TURNOVER.

12. CONTRACTOR NEED TO CONFIRM TO TEST ALL EQUIPMENT FOR PROPER OPERATION.

14. CONTRACTOR SHALL COORDINATE STAGING, DUMPSTER AND TEMPORARY FACILITIES WITH OWNER WITH PRIOR NOTIFICATION

15. CONTRACTOR SHALL PROVIDE BARRIERS AND LOCK ELEVATOR AS REQUIRED TO SEPARATE WORK AREAS FROM PUBLIC WHILE MAINTAINING REQUIRED EXITS.

ABBREVIATIONS:

A.F.F.	ABOVE FINISH FLOOR	I.T.F.	INFORMATION TO FOLLOW
AMP.	AMPERE	LT.WT.CONC.	LIGHT WEIGHT CONCRETE
CLG.	CEILING	MC.	MEDICINE CABINET
CL.OPNG	CLEAR OPENING	MIN.	MINIMUM
CMU	CONCRETE MASONRY UNIT	MFR.	MANUFACTURER
		M.O.	MASONRY OPENING
COL.	COLUMN	MUL.	MULLION
CONC.	CONCRETE	NA	NOT APPLICABLE
CONTR.	CONTRACTOR	N.I.C.	NOT IN CONTRACT
D.	DRYER	N.T.S.	NOT TO SCALE
DISP	DISPOSAL	O.C.	ON CENTER
DR.	DOOR	Q.T.	QUARRY TILE
DWG.	DRAWING	RCP	REFLECTED CEILING PLAN
ELEC.	ELECTRICAL	REQ'D	REQUIRED
ELEV.	ELEVATION	SECT.	SECTION
EQ.	EQUAL	#S	NUMBER OF SHELVES
E.W.C.	ELECTRIC WATER COOLER	S.C.	SOLID CORE
		S.R.	SHOE RACK
EXIST.	EXISTING	S.S.	STAINLESS STEEL
F.E.C.	FIRE EXTINGUISHER	TAS	TEXAS ACCESSIBILITY STANDARD
F.H.C.	FIRE HOSE CABINET		
FIN.	FINISH	TBD	TO BE DETERMINED
GA.	GAUGE	TC	TOP OF CONCRETE
GL.	GLASS	TE & S	TOP EDGE & SPLASH
GYP.B.D	GYPSUM BOARD	TF	TOP OF FRAMING
HA	HANDICAP ADAPTABLE	TP	TOP OF PLATE
H.M.	HOLLOW METAL	U.N.O.	UNLESS NOTED OTHERWISE
HRDW.	HARDWARE	V.C.T.	VINYL COMPOSITION TILE
HST.	HARD SURFACE TILE	V.I.F.	VERIFY IN FIELD
HT.	HEIGHT	V.	VOLT
H.V.A.C.	HEATING, VENTILATING & AIRCONDITIONING	W.	WASHER
		W/	WITH

DRAWING SYMBOL LEGEND

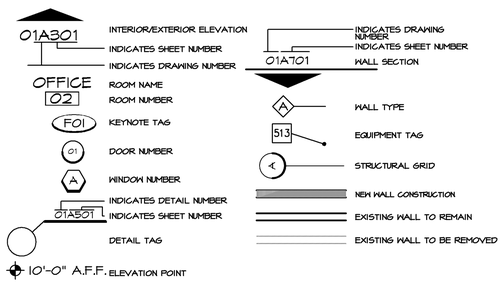

FILE: K:\17017 FELCOR EMBASSY SUITES MN - SITE\ES-A100.DWG
DATE: TIME: 5/23/2017 4:58:31 PM
USER: DMCLOUTH

PREPARED UNDER THE SEAL OF RICHARD CARRELL

ISSUED FOR DESIGN REVIEW, NOT FOR PERMITTING, OR CONSTRUCTION

FELCOR LODGING TRUST

EMBASSY SUITES
7901 34TH AVE S, BLOOMINGTON, MN 55425
AIRPORT SOUTH
MINNEAPOLIS, MINNESOTA

● CARRELL
■ PARTNERS
▼ & YOST
architecture

5646 Milton Street
Suite 888
Dallas, Texas 75206
214.953.0042
214.953.0702 FAX
cpy@cpyarch.com
www.cpyarch.com

DRAWN BY: DCM
CHECKED BY:
DATE: 9.22.2016
REVISIONS:

PROJECT NO.: 17017
SHEET NO.: A100

DESCRIPTION

Lot 1, Block 1, INTERNATIONAL AIRPORT PARK ADDITION, according to the recorded plat thereof, Hennepin County, Minnesota.

TOGETHER WITH

Outlot A, INTERNATIONAL AIRPORT PARK 3RD ADDITION, according to the recorded plat thereof, Hennepin County, Minnesota.

PROPERTY SUMMARY

1. Subject property's addresses and property identification numbers are:

Lot 1, Block 1:	7901 34th Ave S	06-027-23-21-0003
Outlot A:	3500 American Blvd E	06-027-23-21-0008

2. The gross area of the subject property is 6.775 Acres or 295,138 Square Feet. Areas of individual lots are:

Lot 1, Block 1:	4.970 Acres	216,493 Square Feet
Outlot A:	1.805 Acres	78,645 Square Feet

3. The subject property is zoned HX–R, High Intensity Mixed Use with Residential, per City of Bloomington zoning map dated 01/24/2017.

BENCHMARKS

1. The vertical datum is based on NAVD88. The originating bench marks are BERM and 2785 AY, both referenced from the MnDOT Geodetic Database.

BENCHMARK #1
Top nut of hydrant at northeast corner of property. Elev.=826.31
BENCHMARK #3
Top nut of hydrant at southwest corner of building on surveyed property. Elev.=825.90
BENCHMARK #3
Top nut of hydrant at south line of surveyed property. Elev.=819.32
BENCHMARK #4
Top nut of hydrant at southeast corner of surveyed property. Elev.=816.51

SURVEY NOTES

1. The bearing system for this survey is based on the east line of Lot 1, Block 1, INTERNATIONAL AIRPORT PARK ADDITION having an assumed bearing of South 00 degrees 23 minutes 10 seconds East.
2. This survey was prepared without the benefit of a title commitment or abstract and the surveyor has made no independent search for easements of record, encumbrances, restrictive covenants, ownership title evidence or any other facts that an accurate title search may disclose. Therefore, this survey may be revised by showing that which would be cited in a title commitment and then illustrated on the survey.
3. A Gopher State One Call (GSOC) request was placed on 01/27/2017, under Ticket Number 170270554 for utility locates on this site. The underground utility locations, shown hereon, if any, are based upon locates from those utility providers that actually performed a locate as a result of this request. Utility suppliers often do not respond to these requests but may provide ambiguous maps, plans, and drawings in lieu of physical location. The surveyor makes no guarantees that the underground utilities shown comprise all such utilities in the area, either in service or abandoned. Utility information shown hereon, if any, is a compilation of this map information and those visible utilities that were located during the survey field work. The surveyor further does not warrant that the underground utilities shown hereon, if any, are in the exact location as indicated, although he does certify that they are located as accurately as possible from information available. The surveyor has not physically located the underground utilities. Pursuant to MS 216.D contact Gopher State One Call at (651-454-0002) prior to any excavation.
4. Field work was completed on 02/13/2017.
5. The building(s) and exterior dimensions of the outside wall at ground level are shown on the survey. It may not be the foundation wall.

PL201700055
PL2017-55

LEGEND

- FOUND MONUMENT
- SET MONUMENT MARKED LS 21729
- GATE VALVE / HYDRANT
- SANITARY MANHOLE
- CLEAN OUT
- STORM MANHOLE
- STORM CATCH BASIN
- TRANSFORMER
- LIGHT
- GROUND LIGHT
- GUARD POST
- SIGN
- GAS METER
- ELECTRIC MANHOLE
- ELECTRIC METER
- TELEPHONE PEDESTAL
- FLAG POLE
- BOUNDARY LINE
- RIGHT-OF-WAY LINE
- UNDERLYING / ADJACENT LOT
- TIE LINE
- SECTION LINE
- (100.00) DEED DISTANCE
- WATERMAIN
- SANITARY SEWER
- STORM SEWER
- UE UNDERGROUND ELECTRIC
- UT UNDERGROUND TELEPHONE
- UG UNDERGROUND GAS
- OE OVERHEAD ELECTRICAL WIRE
- CHAIN LINK FENCE
- WOOD FENCE
- RETAINING WALL
- 999.9 SPOT ELEVATION
- 992 CONTOUR
- EASEMENT LINE
- TREE LINE
- CONCRETE CURB
- BUILDING LINE
- BUILDING CANOPY
- BITUMINOUS SURFACE
- CONCRETE SURFACE
- BRICK PAVER SURFACE
- LANDSCAPE MULCH SURFACE
- GRAVEL SURFACE
- NO PARKING SURFACE
- DECIDUOUS TREE
- CONIFEROUS TREE
- SHRUB
- (##) REGULAR PARKING STALL COUNT

VICINITY MAP

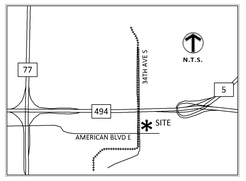

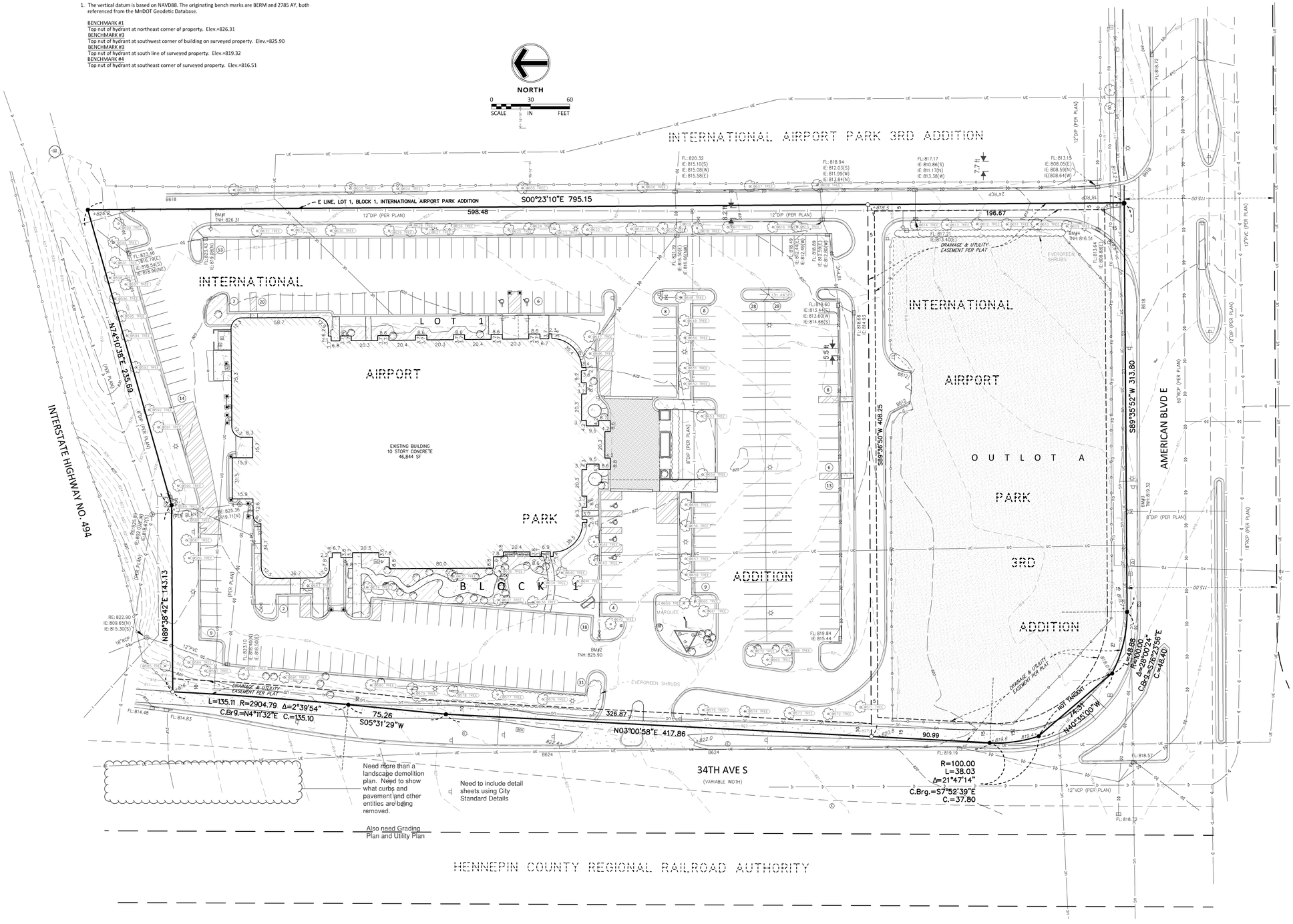

Tree Tag List

Tree Number	Size	Tree Name
568	4	Spruce - Colorado (Picea pungens)
569	4	Spruce - Colorado (Picea pungens)
570	4	Spruce - Colorado (Picea pungens)
571	15	Pine - Red (Pinus resinosa)
572	13	Locust - Honey (Gleditsia triacanthos)
573	9	Locust - Honey (Gleditsia triacanthos)
574	9	Locust - Honey (Gleditsia triacanthos)
575	9	Locust - Honey (Gleditsia triacanthos)
576	13	Locust - Honey (Gleditsia triacanthos)
577	12	Locust - Honey (Gleditsia triacanthos)
578	12	Locust - Honey (Gleditsia triacanthos)
579	13	Locust - Honey (Gleditsia triacanthos)
580	14	Locust - Honey (Gleditsia triacanthos)
581	21	Locust - Honey (Gleditsia triacanthos)
582	20	Locust - Honey (Gleditsia triacanthos)
583	24	Pine - Red (Pinus resinosa)
584	13	Pine - Red (Pinus resinosa)
585	16	Pine - Red (Pinus resinosa)
586	11	Pine - Red (Pinus resinosa)
587	12	Pine - Red (Pinus resinosa)
588	12	Pine - Red (Pinus resinosa)
589	14	Pine - Red (Pinus resinosa)
590	29	Basswood (Tilia americana)
591	11	Crab Apple (Malus spp.)
592	13	Crab Apple (Malus spp.)
593	22	Ash - Green (Fraxinus pennsylvanica)
594	13	Pine - Red (Pinus resinosa)
595	12	Pine - Red (Pinus resinosa)
596	12	Pine - Red (Pinus resinosa)
597	15	Pine - Red (Pinus resinosa)
598	13	Pine - Red (Pinus resinosa)
599	14	Pine - Red (Pinus resinosa)
600	13	Pine - Red (Pinus resinosa)
601	20	Basswood (Tilia americana)
602	6	Aspen - Quaking (Populus tremuloides)
603	5	Aspen - Quaking (Populus tremuloides)
604	6	Aspen - Quaking (Populus tremuloides)
605	10	Aspen - Quaking (Populus tremuloides)
606	6	Aspen - Quaking (Populus tremuloides)
607	4	Aspen - Quaking (Populus tremuloides)
608	7	Aspen - Quaking (Populus tremuloides)
609	5	Maple - Red (Acer rubrum)
610	5	Maple - Red (Acer rubrum)
611	5	Maple - Red (Acer rubrum)
612	6	Maple - Red (Acer rubrum)
613	6	Maple - Red (Acer rubrum)
614	5	Maple - Red (Acer rubrum)
615	13	Basswood (Tilia americana)
616	7	Maple - Amur (Acer ginnala)
617	13	Ash - Green (Fraxinus pennsylvanica)
618	4	Crab Apple (Malus spp.)
619	14	Pine - Red (Pinus resinosa)
620	14	Pine - Red (Pinus resinosa)
621	14	Pine - Red (Pinus resinosa)
622	8	Crab Apple (Malus spp.)
623	15	Pine - Red (Pinus resinosa)
624	14	Basswood (Tilia americana)
625	13	Basswood (Tilia americana)
626	12	Pine - Red (Pinus resinosa)
627	10	Pine - Red (Pinus resinosa)
628	11	Pine - Red (Pinus resinosa)
629	11	Pine - Red (Pinus resinosa)
630	13	Ash - Green (Fraxinus pennsylvanica)
631	13	Ash - Green (Fraxinus pennsylvanica)
632	7	Maple - Amur (Acer ginnala)
633	21	Pine - Red (Pinus resinosa)
634	16	Ash - Green (Fraxinus pennsylvanica)
635	6	Spruce - Colorado (Picea pungens)
636	5	Spruce - Colorado (Picea pungens)
637	11	Locust - Honey (Gleditsia triacanthos)
638	11	Locust - Honey (Gleditsia triacanthos)
639	13	Pine - Red (Pinus resinosa)
640	16	Pine - Red (Pinus resinosa)
641	16	Pine - Red (Pinus resinosa)
642	6	Locust - Honey (Gleditsia triacanthos)
643	3	Crab Apple (Malus spp.)
644	3	Crab Apple (Malus spp.)
645	8	Crab Apple (Malus spp.)
646	7	Crab Apple (Malus spp.)
647	5	Crab Apple (Malus spp.)
648	19	Pine - Red (Pinus resinosa)
649	2	Maple - Amur (Acer ginnala)
650	4	Maple - Amur (Acer ginnala)
651	3	Maple - Amur (Acer ginnala)
652	3	Maple - Amur (Acer ginnala)
653	14	Basswood (Tilia americana)
654	13	Basswood (Tilia americana)
655	4	Maple - Amur (Acer ginnala)
656	4	Maple - Amur (Acer ginnala)
657	3	Maple - Amur (Acer ginnala)
658	3	Maple - Amur (Acer ginnala)
659	6	Spruce - Colorado (Picea pungens)
660	4	Spruce - Colorado (Picea pungens)
661	10	Spruce - Colorado (Picea pungens)

Sambatek
www.sambatek.com
12800 Whitewater Drive, Suite 300
Minnetonka, MN 55343
763.476.6010 telephone
763.476.8532 facsimile
Engineering | Surveying | Planning | Environmental

Client
CARRELL PARTNERS & YOST ARCHITECTS

Project
EMBASSY SUITES BLOOMINGTON

Location
BLOOMINGTON, MN
7901 34TH AVE S

Certification
I hereby certify that this survey, plan or report was prepared by me or under my direct supervision and that I am a duly licensed LAND SURVEYOR under the laws of the State of Minnesota.

Rick M. Blom
Registration No. 21729 Date: 02/14/2017
If applicable, contact us for a wet signed copy of this survey which is available upon request at Sambatek's, Minnetonka, MN office.

Summary
Designed: Drawn: DL
Approved: RMB Book / Page: 1257/32
Phase: Initial Issued: 02/14/2017

Revision History
No. Date By Submittal / Revision

Sheet Title
BOUNDARY & TOPOGRAPHICAL SURVEY

Sheet No. Revision
1/1

Project No. 20697

Feb 14, 2017 - 8:19am - User:dsteinbach L:\PROJECTS\20697\CAD\Survey\20697-BOTOPO.dwg

PL201700055
PL2017-55

LEGEND

- LIMITS OF PAVEMENT REMOVAL
- LIMITS OF GRAVEL REMOVAL
- LIMITS OF PAVEMENT SAWCUT
- REMOVE EXISTING TREES
- (#) EXISTING PARKING SPACES

0 15 30 60
(FEET)
1 inch = 30 ft.

NOTES:

1. SEE L201 FOR TREE REMOVAL

RLG
RAYMOND L. GOODSON JR., INC.
CONSULTING ENGINEERS
5601 BRIDGE ST., SUITE 420,
FORT WORTH, TEXAS 76112 817/687-0080
E-MAIL: rlg@rlginc.com FIRM REG: F-493

PROFESSIONAL ENGINEER
I hereby certify that this plan, specification, or report was prepared by me or under my direct supervision and that I am a duly Licensed Professional Engineer under the laws of the State of Minnesota.

Print Name: MICHAEL J. McLAREN
Signature:
Date 5/23/17 License # 42897

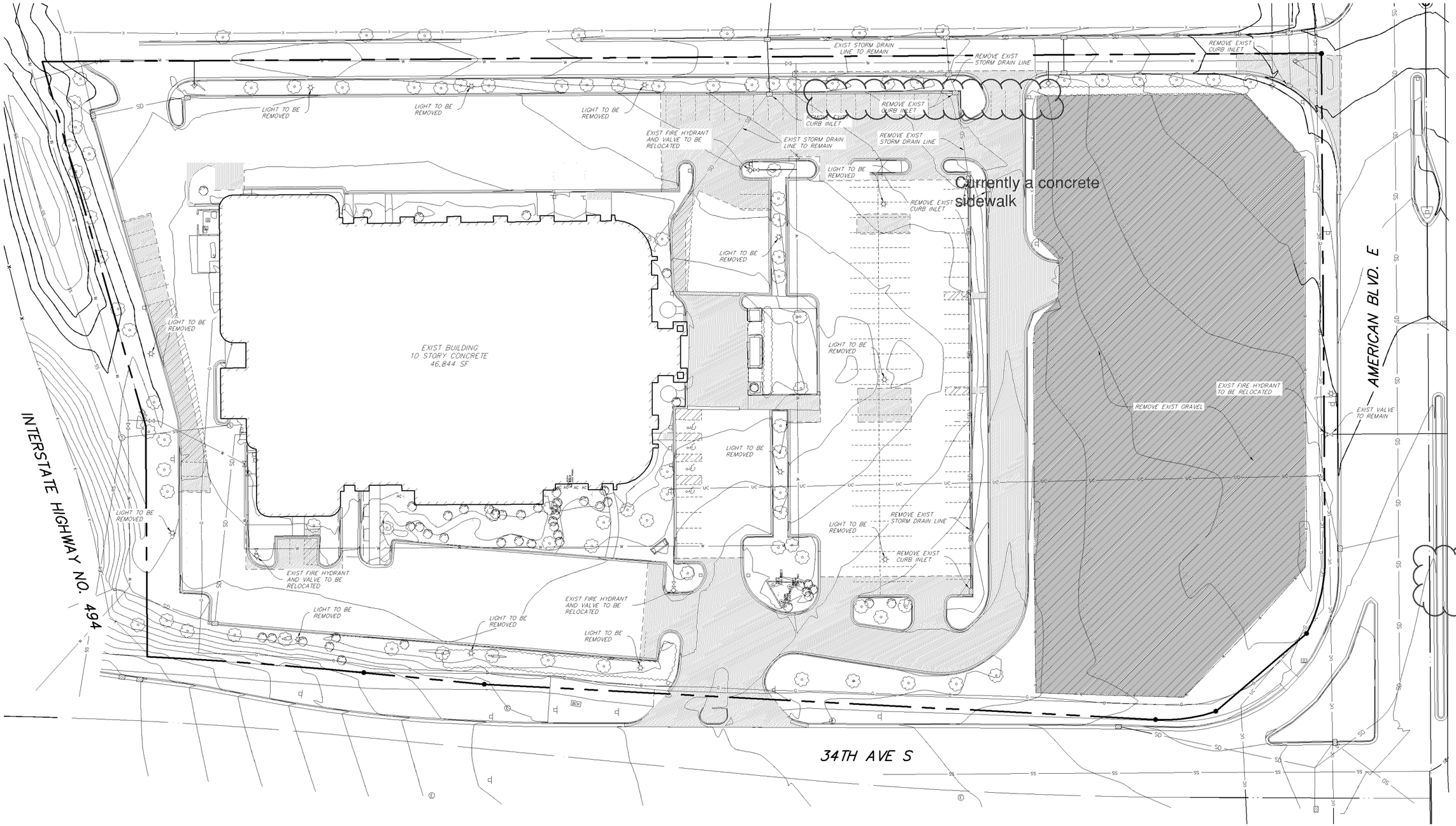

FELCOR

EMBASSY SUITES
7901 34TH AVE S, BLOOMINGTON, MN 55425
AIRPORT SOUTH
MINNEAPOLIS, MINNESOTA

● CARRELL
■ PARTNERS
▼ & YOST
architecture

5646 Milton Street
Suite 688
Dallas, Texas 75206
214.953.0042
214.953.0702 FAX
cpy@cpyarch.com
www.cpyarch.com

DRAWN BY:	RLG
CHECKED BY:	RLG
DATE:	05/23/17
REVISIONS:	
PROJECT NO.:	
SHEET NO.:	C1.00

DEMOLITION PLAN

PL201700055
PL2017-55

LEGEND

- INSTALL 5" ASPHALT
- INSTALL 8" CONCRETE
- INSTALL 4" CONCRETE
- PROPOSED CURB
- LIMITS OF PAVEMENT SAWCUT

0 15 30 60
(FEET)
1 inch = 30 ft.

RAYMOND L. GOODSON JR., INC.
CONSULTING ENGINEERS
5601 BRIDGE ST., SUITE 420,
FORT WORTH, TEXAS 76112 817/687-0080
E-MAIL: rlg@rlginc.com FIRM REG: F-493

PROFESSIONAL ENGINEER
I hereby certify that this plan, specification, or report was prepared by me or under my direct supervision and that I am a duly Licensed Professional Engineer under the laws of the State of Minnesota.
Print Name: MICHAEL J. McLAREN
Signature:
Date 5/23/17 License # 42897

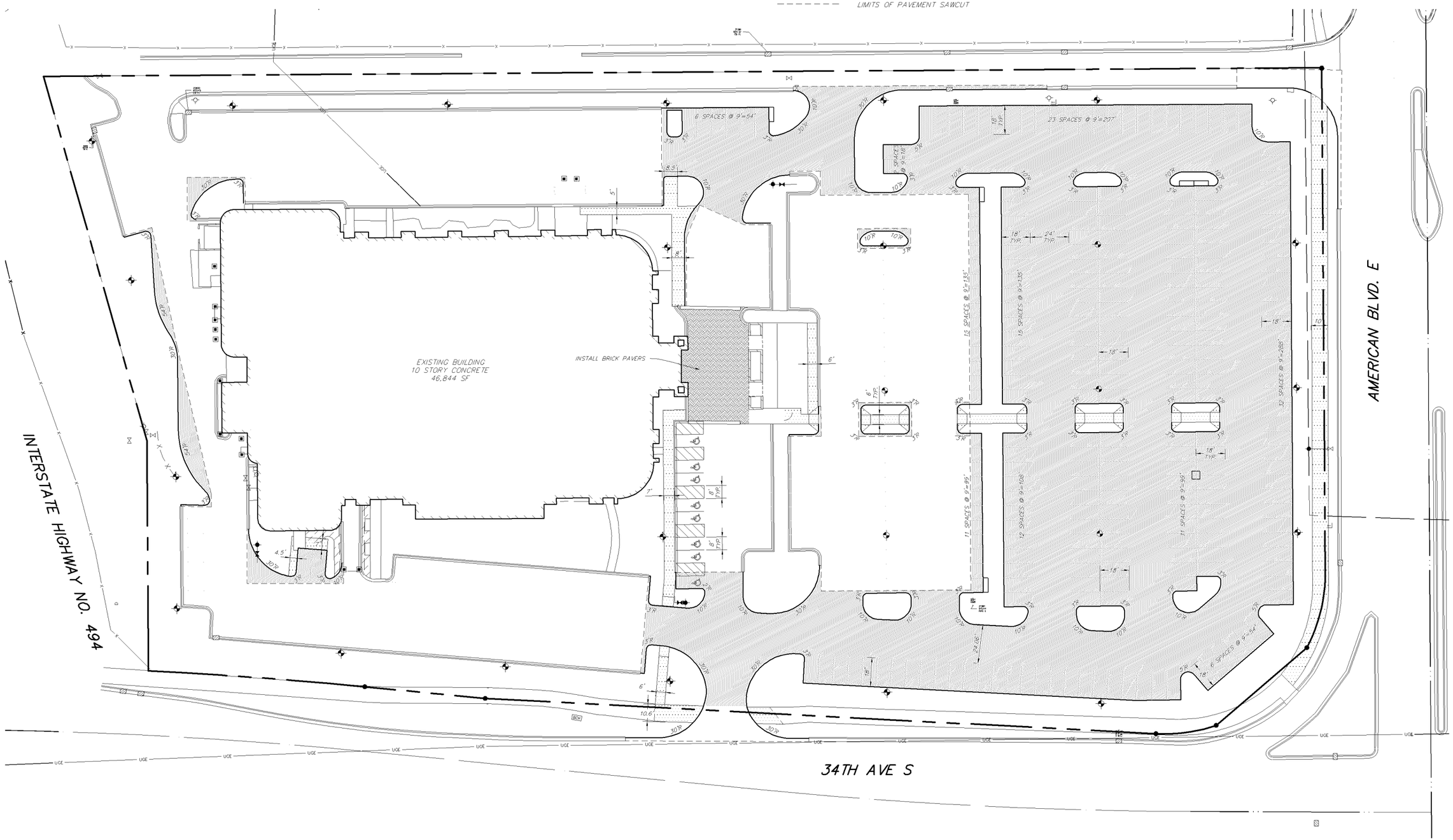

PAVING AND DIMENSIONAL CONTROL

FELCOR LODGING TR

EMBASSY SUITES
7901 34TH AVE S, BLOOMINGTON, MN 55425
AIRPORT SOUTH
MINNEAPOLIS, MINNESOTA

CARRELL
PARTNERS
& YOST
architecture
5646 Milton Street
Suite 888
Dallas, Texas 75206
214.953.0042
214.953.0702 FAX
apy@apyarch.com
www.apyarch.com

DRAWN BY:	RLG
CHECKED BY:	RLG
DATE:	05/23/17
REVISIONS:	
PROJECT NO.:	
SHEET NO.:	C2.00

PL201700055
PL2017-55

RAYMOND L. GOODSON JR., INC.
CONSULTING ENGINEERS
5601 BRIDGE ST., SUITE 420,
FORT WORTH, TEXAS 76112 817/687-0080
E-MAIL: rlg@rlginc.com FIRM REG: F-493

LEGEND

- 668 — EXISTING CONTOUR LINE
- 668 — PROPOSED CONTOUR LINE
- 667.45TC 666.95G — EXISTING SPOT ELEVATION
- 667.53 — EXISTING SPOT ELEVATION
- 667.63 — CALCULATED SPOT ELEVATION
- 668.20TC 667.70G — PROPOSED SPOT ELEVATION
- LIMITS OF PAVEMENT SAWCUT
- FLOW ARROW

0 15 30 60
(FEET)
1 inch = 30 ft.

PROFESSIONAL ENGINEER
I hereby certify that this plan, specification, or report was prepared by me or under my direct supervision and that I am a duly Licensed Professional Engineer under the laws of the State of Minnesota.

Print Name: MICHAEL J. McLAREN
Signature:
Date 5/23/17 License # 42897

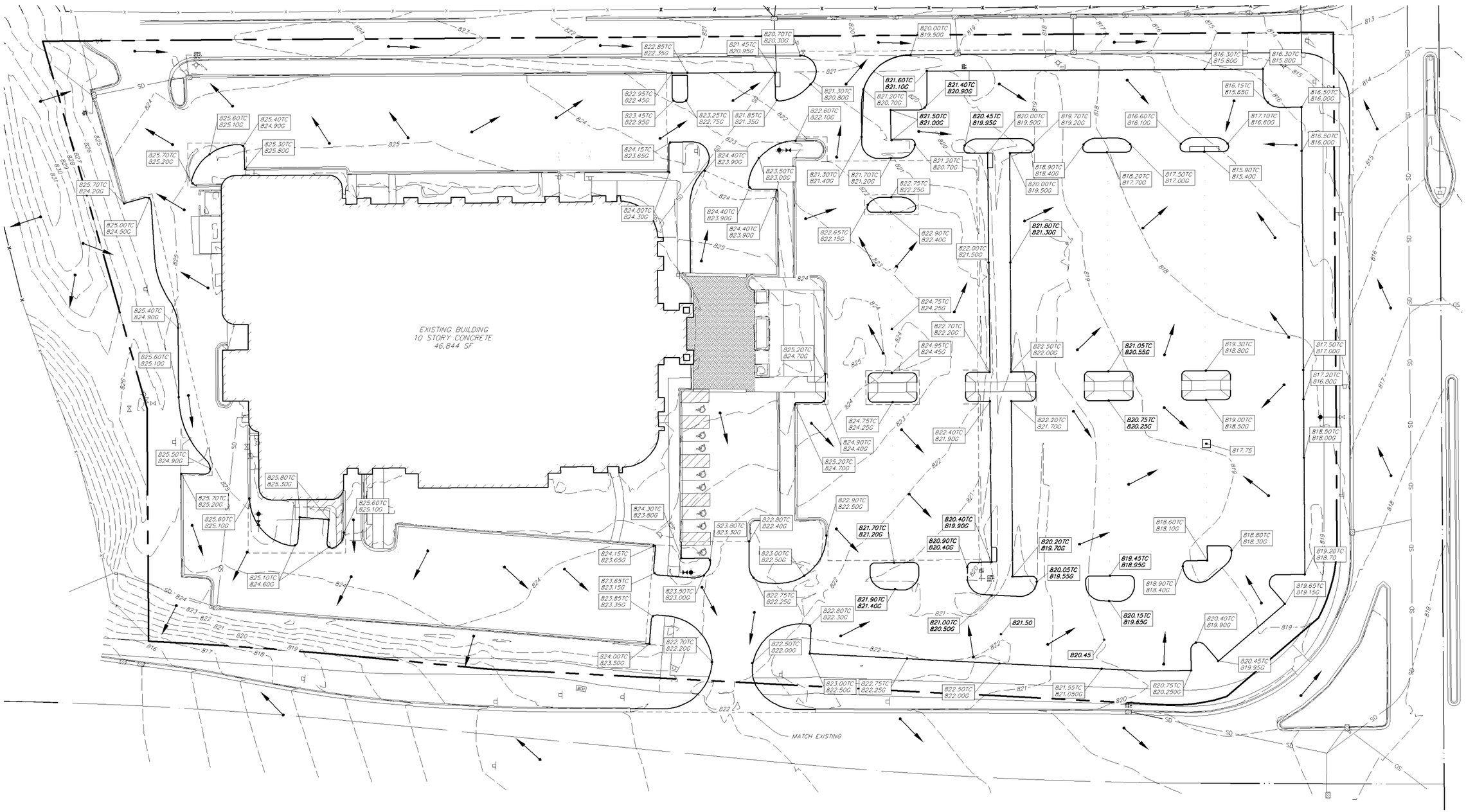

A tree is required in every parking lot island. Add at least one deciduous tree the south parking lot island along 34th Avenue South.

EMBASSY
7901 34TH AVE S, BLOOMING
AIRPORT
MINNEAPOLIS, M

CARRELL PARTNERS & YOST architecture
5646 Milton Street
Suite 888
Dallas, Texas 75206
214.953.0043
214.953.0702 FAX
apy@apyarch.com
www.apyarch.com

DRAWN BY:	RLG
CHECKED BY:	RLG
DATE:	05/23/17
REVISIONS:	
PROJECT NO.:	
SHEET NO.:	C3.00

GRADING PLAN

PL201700055
PL2017-55

LEGEND

- 888 — PROPOSED CONTOUR LINE
- 668 — EXISTING CONTOUR LINE
- DRAINAGE DIVIDE LINE
- FLOW ARROW
- A / 0.00ac — DRAINAGE AREA NUMBER / AREA (TYP)

0 15 30 60
(FEET)
1 inch = 30 ft.

RAYMOND L. GOODSON JR., INC.
CONSULTING ENGINEERS
5601 BRIDGE ST., SUITE 420,
FORT WORTH, TEXAS 76112 817/687-0080
E-MAIL: rlg@rlginc.com FIRM REG: F-493

PROFESSIONAL ENGINEER
I hereby certify that this plan, specification, or report was prepared by me or under my direct supervision and that I am a duly Licensed Professional Engineer under the laws of the State of Minnesota.

Print Name: MICHAEL J. McLAREN
Signature:
Date 5/23/17 License # 42897

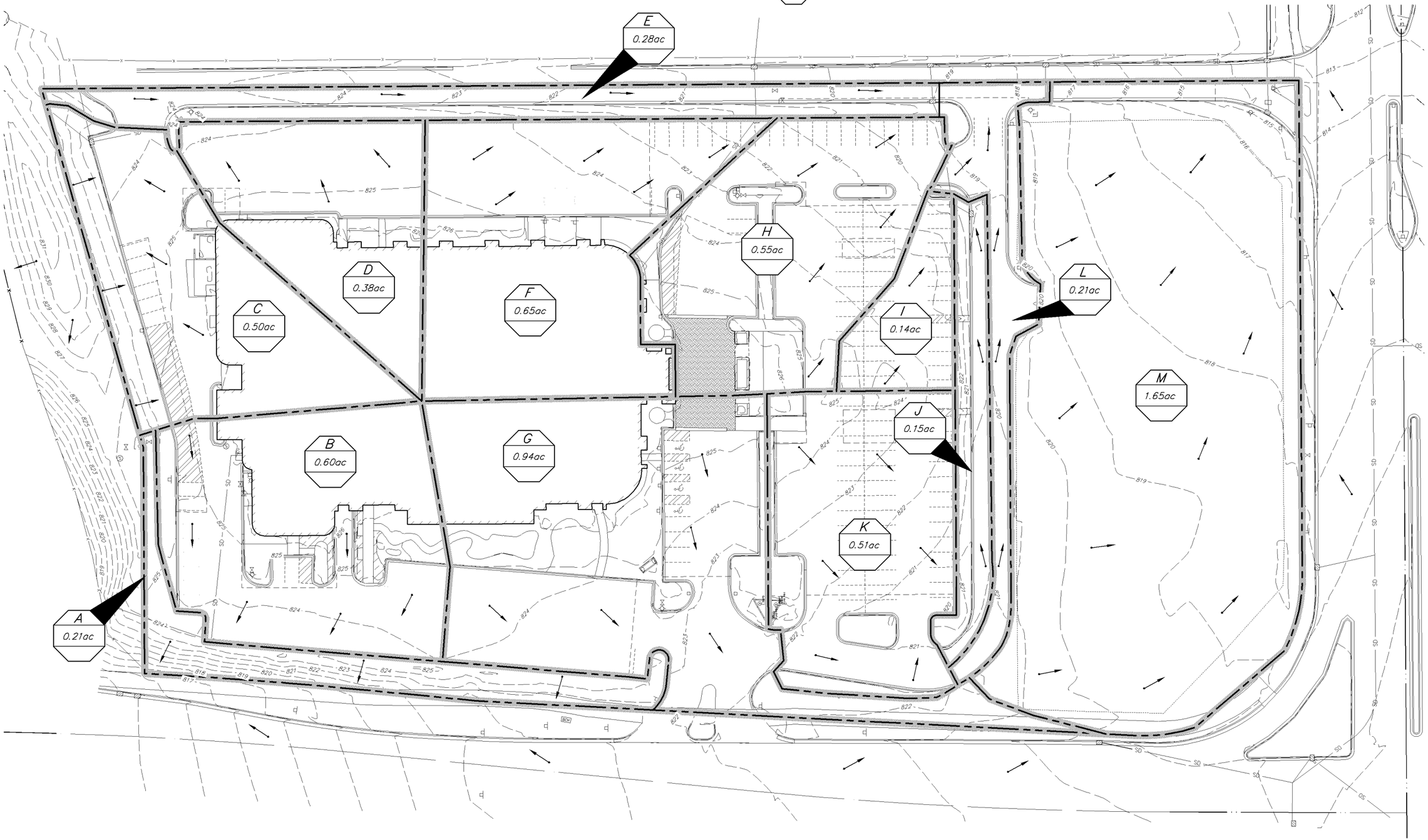

PRE-DEVELOPED DRAINAGE AREA MAP

FELCOR LODGING TR.

EMBASSY SUITES
7901 34TH AVE S, BLOOMINGTON, MN 55425
AIRPORT SOUTH
MINNEAPOLIS, MINNESOTA

● CARRELL
■ PARTNERS
▼ & YOST
architecture
5646 Milton Street
Suite 888
Dallas, Texas 75206
214.953.0042
214.953.0702 FAX
cpy@cpyarch.com
www.cpyarch.com

DRAWN BY:	RLG
CHECKED BY:	RLG
DATE:	05/23/17
REVISIONS:	
PROJECT NO.:	
SHEET NO.:	C4.00

PL201700055
PL2017-55

LEGEND

- 888 — PROPOSED CONTOUR LINE
- -668- — EXISTING CONTOUR LINE
- DRAINAGE DIVIDE LINE
- FLOW ARROW
- A / 0.00ac — DRAINAGE AREA NUMBER / AREA (TYP)

0 15 30 60
(FEET)
1 inch = 30 ft.

RLG
RAYMOND L. GOODSON JR., INC.
CONSULTING ENGINEERS
5601 BRIDGE ST., SUITE 420,
FORT WORTH, TEXAS 76112 817/687-0080
E-MAIL: rlg@rlginc.com FIRM REG: F-493

PROFESSIONAL ENGINEER
I hereby certify that this plan, specification, or report was prepared by me or under my direct supervision and that I am a duly Licensed Professional Engineer under the laws of the State of Minnesota.
Print Name: MICHAEL J. McLAREN
Signature:
Date 5/23/17 License # 42897

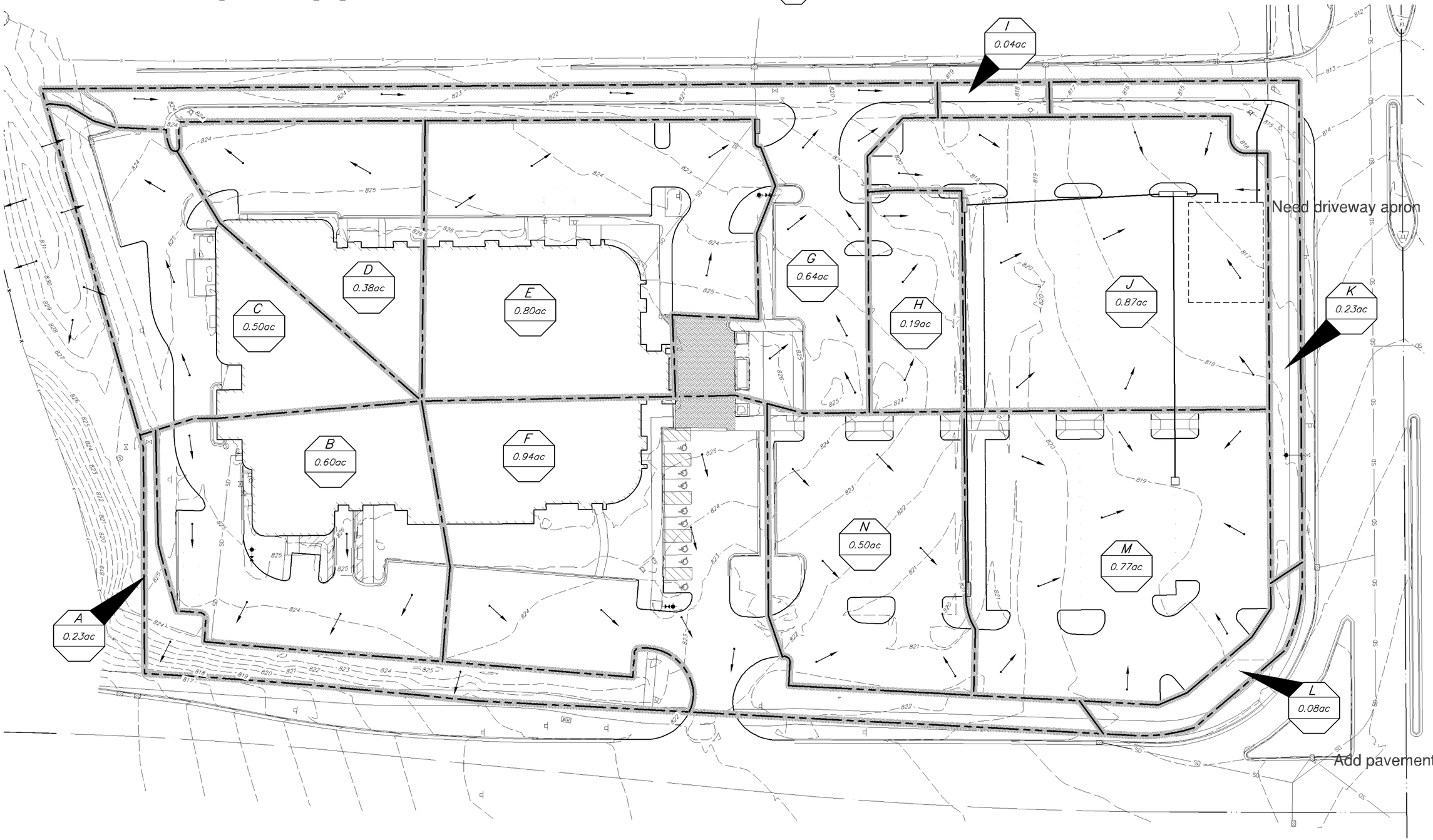

POST-DEVELOPED DRAINAGE AREA MAP

FELCOR

EMBASSY SUITES
7901 34TH AVE S, BLOOMINGTON, MN 55425
A I R P O R T S O U T H
MINNEAPOLIS, MINNESOTA

CARRELL PARTNERS & YOST architecture
5646 Milton Street
Suite 888
Dallas, Texas 75230
214.953.0043
214.953.0702 FAX
apy@apyarch.com
www.apyarch.com

DRAWN BY:	RLG
CHECKED BY:	RLG
DATE:	05/23/17
REVISIONS:	
PROJECT NO.:	
SHEET NO.:	C4.01

PL201700055
PL2017-55

LEGEND

- EXISTING WATER LINE
- PROPOSED WATER LINE
- EXISTING WATER VALVE
- EXISTING FIRE HYDRANT
- PROPOSED WATER VALVE
- PROPOSED FIRE HYDRANT

0 15 30 60
(FEET)
1 inch = 30 ft.

RAYMOND L. GOODSON JR., INC.
CONSULTING ENGINEERS
5601 BRIDGE ST., SUITE 420,
FORT WORTH, TEXAS 76112 817/687-0080
E-MAIL: rlg@rlginc.com FIRM REG: F-493

PROFESSIONAL ENGINEER
I hereby certify that this plan, specification, or report was prepared by me or under my direct supervision and that I am a duly Licensed Professional Engineer under the laws of the State of Minnesota.

Print Name: MICHAEL J. McLAREN
Signature:
Date 5/23/17 License # 42897

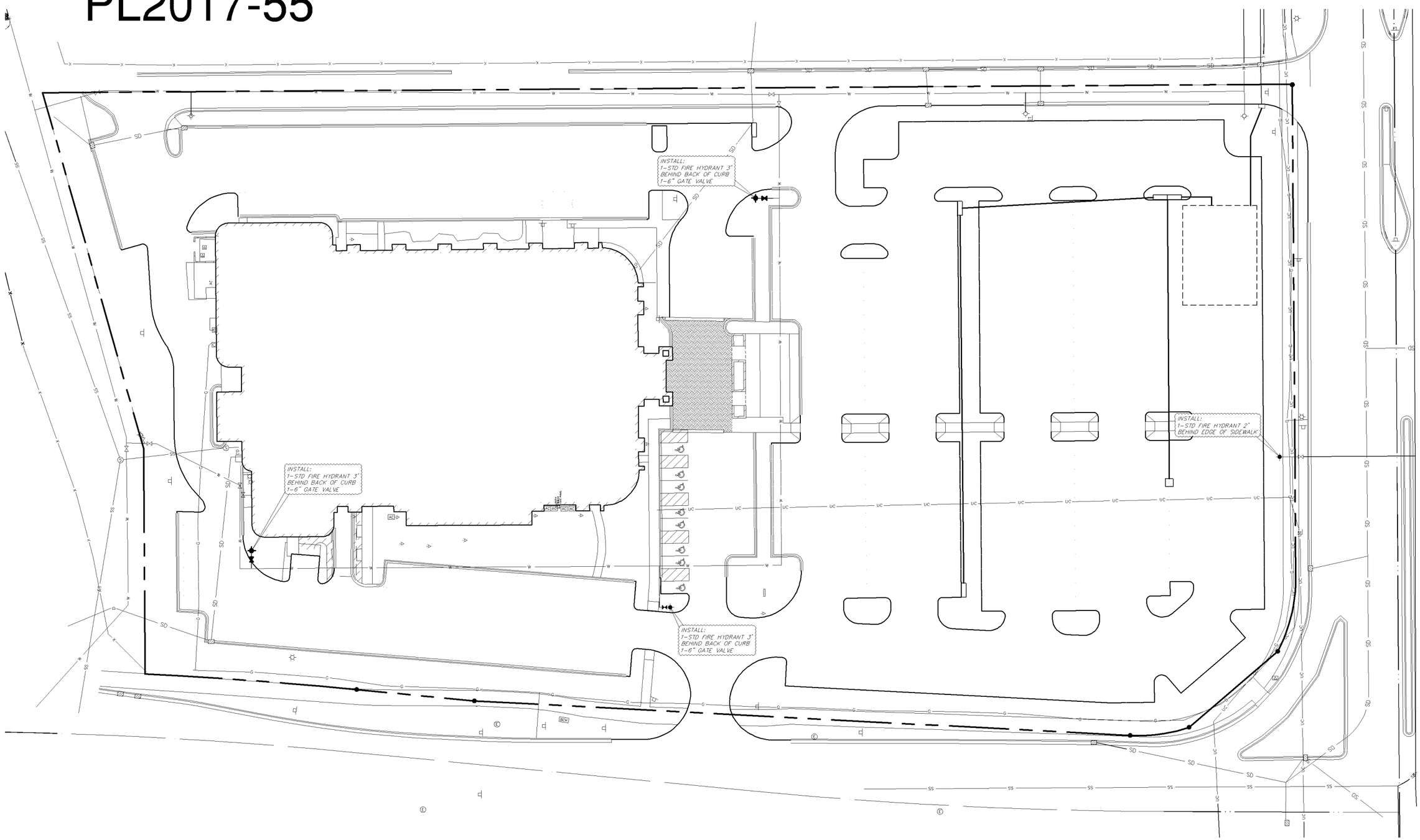

FELCOR

EMBASSY SUITES
7901 34TH AVE S, BLOOMINGTON, MN 55425
AIRPORT SOUTH
MINNEAPOLIS, MINNESOTA

CARRELL PARTNERS & YOST architecture

5646 Milton Street
Suite 888
Dallas, Texas 75206
214.953.0043
214.953.0702 FAX
apy@apyarch.com
www.apyarch.com

DRAWN BY:	RLG
CHECKED BY:	RLG
DATE:	05/23/17
REVISIONS:	
PROJECT NO.:	
SHEET NO.:	C5.00

WATER PLAN

Storm Frequency	100 Year (1%)
Duration	24-hour
Rainfall (in)	7.5

Total Area (acres): 6.78

Existing Conditions (100-year storm)	Area (ft^2)	% of Total Area	Rating	CN	Weighted Curve Number	% Impervious	Weighted %
Open Space: Good Condition	8,544.0	0.03	A	39	1.1	0	0.0
Gravel	21,973.0	0.07	A	76	5.7	0	0.0
Paved	5,847.0	0.02	A	98	1.9	85	1.7
Open Space: Good Condition	33,848.0	0.11	B	61	7.0	0	0.0
Gravel	36,281.0	0.12	B	85	10.4	0	0.0
Paved	188,807.0	0.64	B	98	62.7	85	54.3
Total:	295,300.0	1.00			88.8		56.0

Direct Runoff	P (in)	S	0.2*S	0.8*S
Q=	7.50	1.26	0.25	1.01
Q (in)=	6.18			

Q (ft) = 0.515
Area (ft^2) = 295,300.0 6.8ac

Total Runoff (ft^3) = 151,968.95 3.49ac-ft

Storm Frequency	100 Year (1%)
Duration	24-hour
Rainfall (in)	7.5

Total Area (acres): 6.78

Proposed Conditions (100-year storm)	Area (ft^2)	% of Total Area	Rating	CN	Weighted Curve Number	% Impervious	Weighted %
Open Space: Good Condition	8727.0	0.03	A	39	1.2	0	0.0
Paved	27490.0	0.09	A	98	9.1	85	7.9
Open Space: Good Condition	53973.0	0.18	B	61	11.1	0	0.0
Paved	205209.0	0.69	B	98	68.1	85	59.1
Total:	295,300.0				89.5		67.0

Direct Runoff	P (in)	S	0.2*S	0.8*S
Q=	7.50	1.17	0.23	0.94
Q (in)=	6.25			

Q (ft) = 0.521
Area (ft^2) = 295,300.0 6.8ac

Total Runoff (ft^3) = 153,914.10 3.53ac-ft

Total Volume of Storage Required (ft^3) = 1,945.15 0.04ac-ft
Adjusted Volume (SF=2) **3,890.31 0.09ac-ft**

LEGEND

- SD — EXISTING STORM DRAIN
- PROPOSED STORM DRAIN
- EXISTING CURB INLET
- PROPOSED CURB INLET
- PROPOSED GRATE INLET

0 15 30 60
(FEET)
1 inch = 30 ft.

RAYMOND L. GOODSON JR., INC.
CONSULTING ENGINEERS
5601 BRIDGE ST., SUITE 420,
FORT WORTH, TEXAS 76112 817/687-0080
E-MAIL: rlg@rlginc.com FIRM REG: F-493

PROFESSIONAL ENGINEER
I hereby certify that this plan, specification, or report was prepared by me or under my direct supervision and that I am a duly Licensed Professional Engineer under the laws of the State of Minnesota.

Print Name: MICHAEL J. McLAREN
Signature:
Date 5/23/17 License # 42897

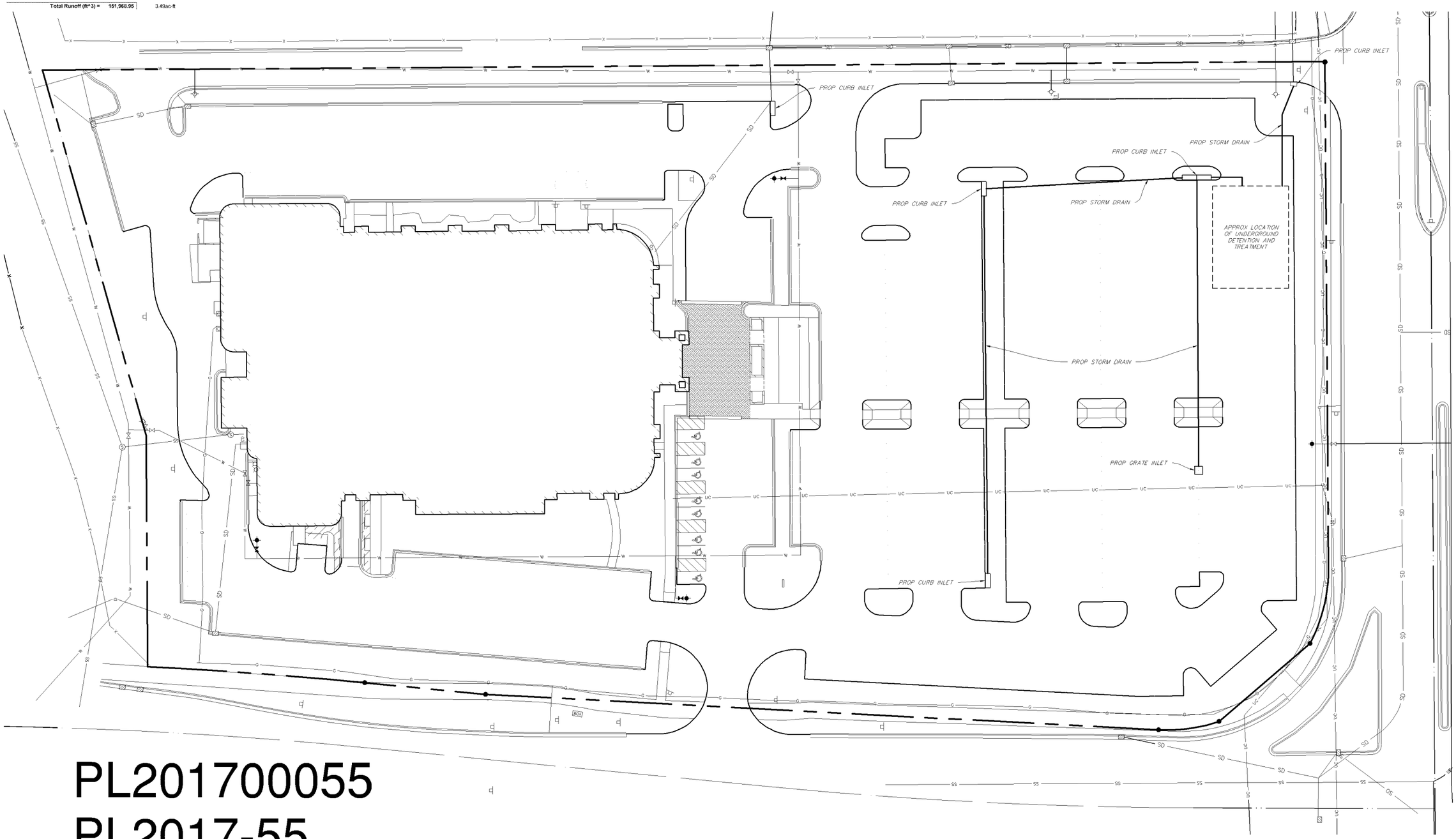

PL201700055
PL2017-55

STORM PLAN

FETCOR

EMBASSY SUITES
7901 34TH AVE S, BLOOMINGTON, MN 55425
AIRPORT SOUTH
MINNEAPOLIS, MINNESOTA

CARRELL PARTNERS & YOST architecture
5646 Milton Street
Suite 880
Dallas, Texas 75206
214.953.0042
214.953.0702 FAX
cpy@cpyarch.com
www.cpyarch.com

DRAWN BY: RLG
CHECKED BY: RLG
DATE: 05/23/17
REVISIONS:
PROJECT NO.:
SHEET NO.: C6.00

PL201700055
PL2017-55

RAYMOND L. GOODSON JR., INC.
CONSULTING ENGINEERS
5601 BRIDGE ST., SUITE 420,
FORT WORTH, TEXAS 76112 817/687-0080
E-MAIL: rlg@rlginc.com FIRM REG: F-493

LEGEND

- INSTALL INLET PROTECTION
- INSTALL SILT FENCE
- ORGANIC FILTER TUBE
- 668 — EXISTING CONTOUR LINE
- 668 — PROPOSED CONTOUR LINE
- INSTALL 50' TEMPORARY CONSTRUCTION ENTRANCE

0 15 30 60
(FEET)
1 inch = 30 ft.

PROFESSIONAL ENGINEER
I hereby certify that this plan, specification, or report was prepared by me or under my direct supervision and that I am a duly Licensed Professional Engineer under the laws of the State of Minnesota.

Print Name: MICHAEL J. McLAREN
Signature:
Date 5/23/17 License # 42897

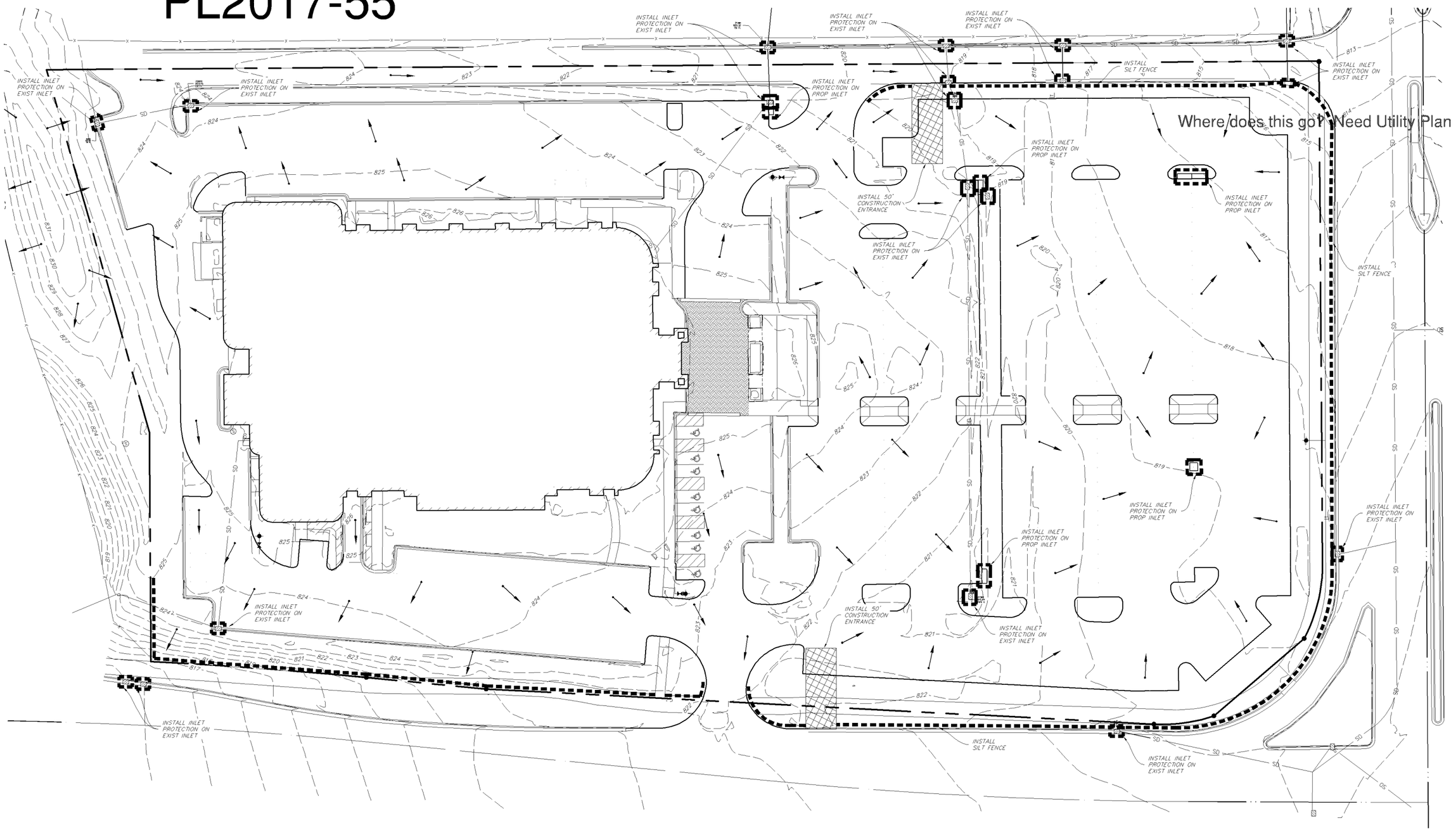

EROSION CONTROL PLAN

EMBASSY SUITES
7901 34TH AVE S, BLOOMINGTON, MN 55425
AIRPORT SOUTH
MINNEAPOLIS, MINNESOTA

FELCOR LODGING TR.

● CARRELL
■ PARTNERS
▼ & YOST
architecture

5646 Milton Street
Suite 888
Dallas, Texas 75206
214.953.0042
214.953.0702 FAX
cpy@cpyarch.com
www.cpyarch.com

DRAWN BY:	RLG
CHECKED BY:	RLG
DATE:	05/23/17
REVISIONS:	
PROJECT NO.:	
SHEET NO.:	C7.00

PL201700055
PL2017-55

- HYDRANT TO BE:
  - O WATEROUS CLASSIC PACER.
  - O MUELLER SUPER CENTURION 250 MODEL A-423.
  - O OR APPROVED EQUAL.
- EQUIP WITH THREE HOSE NOZZLES/CONNECTIONS AS FOLLOWS:
  - O ONE – FACTORY INSTALLED 5 INCH STORZ PUMPER NOZZLE/CONNECTOR, INCLUDING A MANUFACTURER SUPPLIED AND INSTALLED ANODIZED ALUMINUM NOZZLE CAP WITH A 1.5 INCH PENTAGON NUT AND NO ROCKER LUG.
  - O TWO – 2.5 INCH HOSE NOZZLES/CONNECTIONS (WITH NATIONAL STANDARD THREADS) AND STANDARD NOZZLE CAPS WITH 1.5 INCH PENTAGON NUTS, AND NO ROCKER LUGS.
- USE SS NUTS AND BOLTS AS APPROVED BY THE ENGINEER.
- ALL EXPOSED WATERMAIN SHALL BE WRAPPED WITH POLYETHYLENE IN ACCORDANCE WITH AWWA C-105.
- BARREL TO BE BRIGHT RED.
- ALL VALVES TO OPEN COUNTER-CLOCKWISE.
- SEE TYPICAL VALVE INSTALLATION DETAIL FOR VALVE.
- WATEROUS PACER CLASSIC HYDRANTS SHALL INCLUDE INSTALLATION OF THE MANUFACTURERS MOST CURRENT ANTI-CHATTER BRASS UPPER VALVE WASHER.

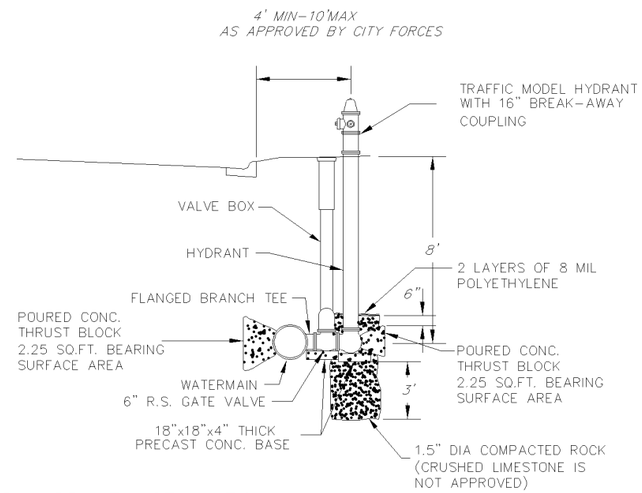

CLOSE COUPLED HYDRANT INSTALLATION
CLS-COUP_HYD_INST.dwg 1/2015

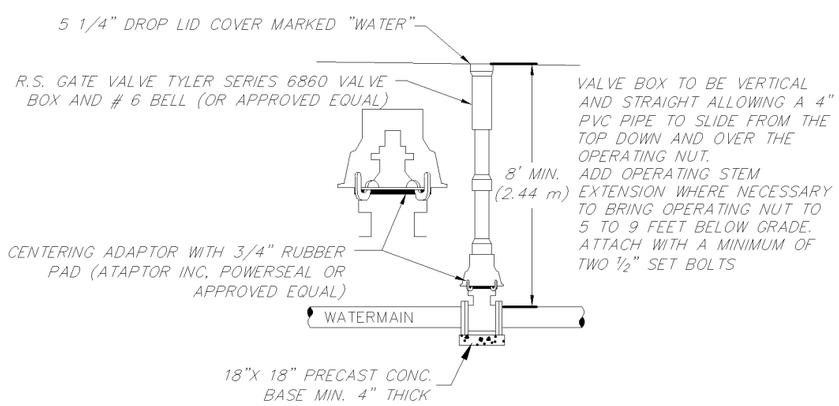

TYPICAL VALVE INSTALLATION
VALVE.dwg 1/2015

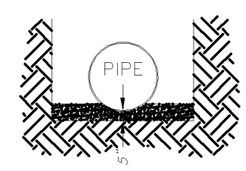

PIPE BEDDED IN GRANULAR BEDDING TO DEPTH OF 5 INCHES. BACKFILL COMPACTED TO FINISHED GRADE.

PIPE BEDDING DETAIL
PIPE-BED.DWG 4/2009

RAYMOND L. GOODSON JR., INC.
CONSULTING ENGINEERS
5601 BRIDGE ST., SUITE 420,
FORT WORTH, TEXAS 76112 817/687-0080

Provide details, elevations, location, clearance system, support supporting sizing, provide maintenance agreement

PROFESSIONAL ENGINEER
I hereby certify that this plan, specification, or report was prepared by me or under my direct supervision and that I am a duly Licensed Professional Engineer under the laws of the State of Minnesota.
Print Name: J. MICHAEL L. McLAREN
Signature:
Date:
License #:

FELCOR LODGING TR.

EMBASSY SUITES
7901 34TH AVE S, BLOOMINGTON, MN 55425
AIRPORT SOUTH
MINNEAPOLIS, MINNESOTA

CARRELL PARTNERS & YOST architecture
5646 Milton Street
Suite 888
Dallas, Texas 75230
214.953.0043
214.953.0702 FAX
apy@apyarch.com
www.apyarch.com

DRAWN BY:	RLG
CHECKED BY:	RLG
DATE:	05/23/17
REVISIONS:	
PROJECT NO.:	
SHEET NO.:	C8.00

CITY STD
WATER DETAILS

PL201700055
PL2017-55

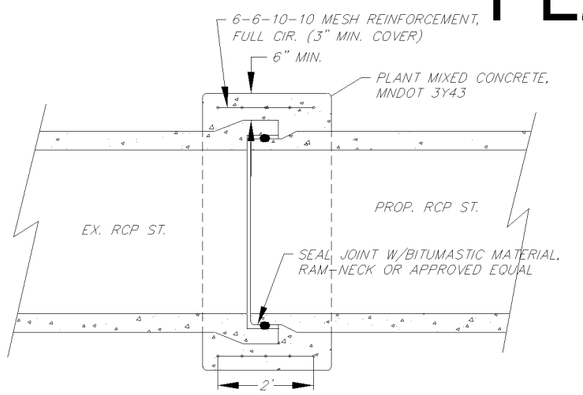

STANDARD CONSTRUCTION JOINT
STD_CONST_JOINT.DWG 4/2008

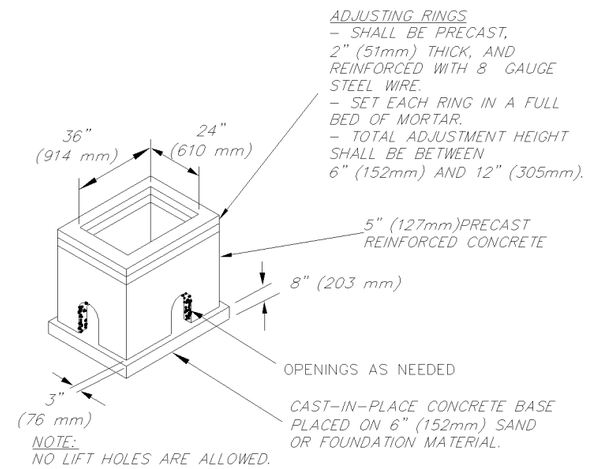

STANDARD CATCH BASIN
STD_CB.DWG 1/2013

PIPE DIA.	L	T
15"	1'	2'
21"	1'	2'
103" ARCH	3'	3'

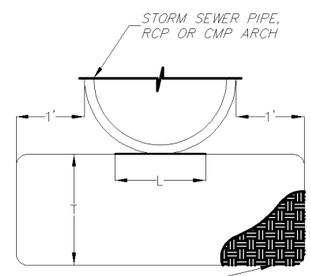

NOTE:
OVERLAP FABRIC "L" FEET UNDER CENTER OF PIPE, SEE TABLE ABOVE.

SPECIAL PIPE BEDDING
STD_PIPE_BEDDING_SPECIAL.DWG 4/2008

RAYMOND L. GOODSON JR., INC.
CONSULTING ENGINEERS
5601 BRIDGE ST., SUITE 420,
FORT WORTH, TEXAS 76112 817/687-0080
E-MAIL: rlg@rlginc.com FIRM REG: F-493

PROFESSIONAL ENGINEER
I hereby certify that this plan, specification, or report was prepared by me or under my direct supervision and that I am a duly Licensed Professional Engineer under the laws of the State of Minnesota.
Print Name: MICHAEL J. McLAREN
Signature:
Date 5/23/17 License # 42897

FELCOR LODGING TR.

EMBASSY SUITES
7901 34TH AVE S, BLOOMINGTON, MN 55425
AIRPORT SOUTH
MINNEAPOLIS, MINNESOTA

CARRELL PARTNERS & YOST architecture
5646 Milton Street
Suite 888
Dallas, Texas 75230
214.953.0043
214.953.0702 FAX
apy@apyarch.com
www.apyarch.com

DRAWN BY: RLG
CHECKED BY: RLG
DATE: 05/23/17
REVISIONS:
PROJECT NO.:
SHEET NO.: C8.01

CITY STD
STORM DETAILS

PL201700055
PL2017-55

RAYMOND L. GOODSON JR., INC.
CONSULTING ENGINEERS
5601 BRIDGE ST., SUITE 420,
FORT WORTH, TEXAS 76112 817/687-0080
E-MAIL: rlg@rlginc.com FIRM REG: F-493

PROFESSIONAL ENGINEER
I hereby certify that this plan, specification, or report was prepared by me or under my direct supervision and that I am a duly Licensed Professional Engineer under the laws of the State of Minnesota.

Print Name: MICHAEL J. McLAREN
Signature:
Date 5/23/17 License # 42897

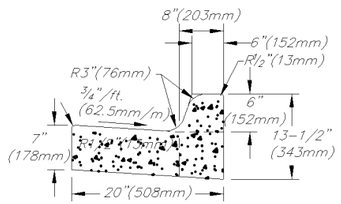

B612 STANDARD CURB & GUTTER
B612_C&G.dwg 4/2009

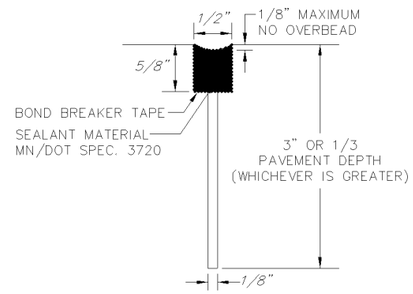

TYPICAL SAWED/SEALED JOINT
SAW_SEALJOINT.DWG 4/2009

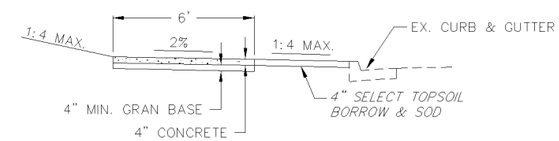

TYPICAL SIDEWALK INSTALLATION
TYP_CONC_WALK.dwg 11/2012

NOTE:
- EACH DRIVEWAY PANEL NOT TO EXCEED 100 SF (9.29 m2).
- REINFORCEMENT BARS OR WELDED WIRE FABRIC (STEEL MESH) ARE NOT ALLOWED IN THE RIGHT-OF-WAY
- CLASS 5 AGGREGATE BASE REQUIRED UNDER CURB AND GUTTER.
- IF PRESENT, STREET LIGHT, SIGNAL AND INTERCONNECT CONDUIT OR DIRECT BURIED STREET LIGHT WIRING MUST BE EXPOSED FOR INSPECTION PRIOR TO POUR

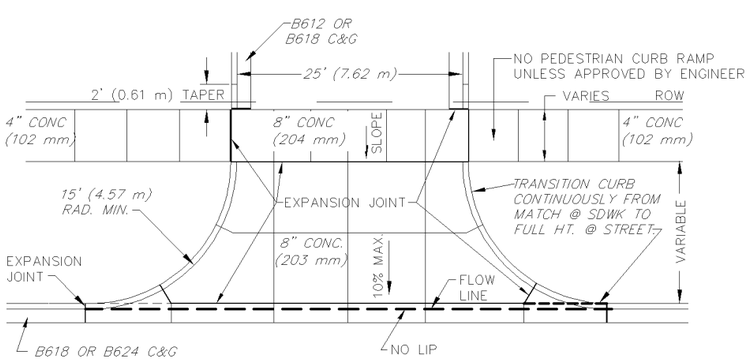

NONRESIDENTIAL DRIVEWAY APPROACH
WITH BOULEVARD SIDEWALK
DRWY_COM.dwg 4/2009

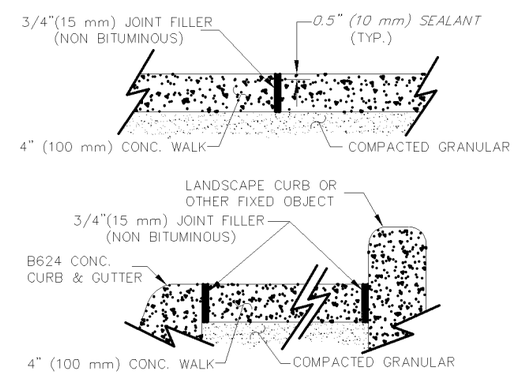

EXPANSION JOINT DETAIL
EXP-JNT.dwg 4/2009

CITY STD
PAVING DETAILS

FELCOR LODGING TR.

EMBASSY SUITES
7901 34TH AVE S, BLOOMINGTON, MN 55425
AIRPORT SOUTH
MINNEAPOLIS, MINNESOTA

CARRELL
PARTNERS
& YOST
architecture
5646 Milton Street
Suite 888
Dallas, Texas 75230
214.953.0043
214.953.0702 FAX
cpy@cpyarch.com
www.cpyarch.com

DRAWN BY:	RLG
CHECKED BY:	RLG
DATE:	05/23/17
REVISIONS:	
PROJECT NO.:	
SHEET NO.:	C8.02

RAYMOND L. GOODSON JR., INC.
CONSULTING ENGINEERS
5601 BRIDGE ST., SUITE 420,
FORT WORTH, TEXAS 76112 817/687-0080
E-MAIL: rlg@rlginc.com FIRM REG: F-493

PROFESSIONAL ENGINEER
I hereby certify that this plan, specification, or report was prepared by me or under my direct supervision and that I am a duly Licensed Professional Engineer under the laws of the State of Minnesota.
Print Name: MICHAEL J. McLAREN
Signature:
Date 5/23/17 License # 42897

PL201700055
PL2017-55

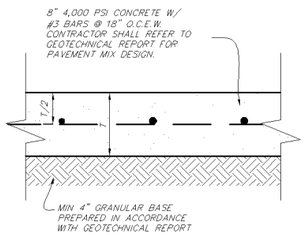

TYPICAL CONCRETE PAVING SECTION
NTS

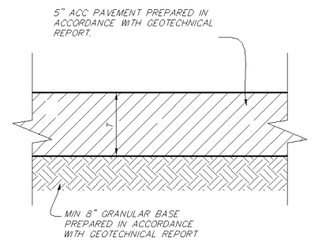

TYPICAL ASPHALT PAVING SECTION
NTS

FELCOR

EMBASSY SUITES
7901 34TH AVE S, BLOOMINGTON, MN 55425
AIRPORT SOUTH
MINNEAPOLIS, MINNESOTA

CARRELL
PARTNERS
& YOST
architecture

5646 Milton Street
Suite 888
Dallas, Texas 75230
214.953.0043
214.953.0702 FAX
apy@apyarch.com
www.apyarch.com

DRAWN BY:	RLG
CHECKED BY:	RLG
DATE:	05/23/17
REVISIONS:	
PROJECT NO.:	
SHEET NO.:	C8.03

PRIVATE
PAVING DETAILS

PL201700055
PL2017-55

ADVANCED DRAINAGE SYSTEMS, INC.

Embassy Suites - International Airport

Bloomington, MN

STORMTECH CHAMBER SPECIFICATIONS

1. CHAMBERS SHALL BE STORMTECH MC-4500 OR APPROVED EQUAL.
2. CHAMBERS SHALL BE MANUFACTURED FROM VIRGIN, IMPACT-MODIFIED POLYPROPYLENE COPOLYMERS.
3. CHAMBER ROWS SHALL PROVIDE CONTINUOUS, UNOBSTRUCTED INTERNAL SPACE WITH NO INTERNAL SUPPORT PANELS THAT WOULD IMPEDE FLOW OR LIMIT ACCESS FOR INSPECTION.
4. THE STRUCTURAL DESIGN OF THE CHAMBERS, THE STRUCTURAL BACKFILL, AND THE INSTALLATION REQUIREMENTS SHALL ENSURE THAT THE LOAD FACTORS SPECIFIED IN THE AASHTO LRFD BRIDGE DESIGN SPECIFICATIONS, SECTION 12.12, ARE MET FOR: 1) LONG-DURATION DEAD LOADS AND 2) SHORT-DURATION LIVE LOADS, BASED ON THE AASHTO DESIGN TRUCK WITH CONSIDERATION FOR IMPACT AND MULTIPLE VEHICLE PRESENCES.
5. CHAMBERS SHALL MEET THE REQUIREMENTS OF ASTM F2418, "STANDARD SPECIFICATION FOR POLYPROPYLENE (PP) CORRUGATED WALL STORMWATER COLLECTION CHAMBERS".
6. CHAMBERS SHALL BE DESIGNED AND ALLOWABLE LOADS DETERMINED IN ACCORDANCE WITH ASTM F2787, "STANDARD PRACTICE FOR STRUCTURAL DESIGN OF THERMOPLASTIC CORRUGATED WALL STORMWATER COLLECTION CHAMBERS".
7. ONLY CHAMBERS THAT ARE APPROVED BY THE SITE DESIGN ENGINEER WILL BE ALLOWED. THE CHAMBER MANUFACTURER SHALL SUBMIT THE FOLLOWING UPON REQUEST TO THE SITE DESIGN ENGINEER FOR APPROVAL BEFORE DELIVERING CHAMBERS TO THE PROJECT SITE:
   a. A STRUCTURAL EVALUATION SEALED BY A REGISTERED PROFESSIONAL ENGINEER THAT DEMONSTRATES THAT THE SAFETY FACTORS ARE GREATER THAN OR EQUAL TO 1.95 FOR DEAD LOAD AND 1.75 FOR LIVE LOAD, THE MINIMUM REQUIRED BY ASTM F2787 AND BY AASHTO FOR THERMOPLASTIC PIPE.
   b. A STRUCTURAL EVALUATION SEALED BY A REGISTERED PROFESSIONAL ENGINEER THAT DEMONSTRATES THAT THE LOAD FACTORS SPECIFIED IN THE AASHTO LRFD BRIDGE DESIGN SPECIFICATIONS, SECTION 12.12, ARE MET. THE 50 YEAR CREEP MODULUS DATA SPECIFIED IN ASTM F2418 MUST BE USED AS PART OF THE AASHTO STRUCTURAL EVALUATION TO VERIFY LONG-TERM PERFORMANCE.
   c. STRUCTURAL CROSS SECTION DETAIL ON WHICH THE STRUCTURAL EVALUATION IS BASED.
8. CHAMBERS AND END CAPS SHALL BE PRODUCED AT AN ISO 9001 CERTIFIED MANUFACTURING FACILITY.

IMPORTANT - NOTES FOR THE BIDDING AND INSTALLATION OF MC-4500 CHAMBER SYSTEM

1. STORMTECH MC-4500 CHAMBERS SHALL NOT BE INSTALLED UNTIL THE MANUFACTURER'S REPRESENTITIVE HAS COMPLETED A PRE-CONSTRUCTION MEETING WITH THE INSTALLERS.
2. STORMTECH MC-4500 CHAMBERS SHALL BE INSTALLED IN ACCORDANCE WITH THE "STORMTECH MC-3500/MC-4500 CONSTRUCTION GUIDE".
3. CHAMBERS ARE NOT TO BE BACKFILLED WITH A DOZER OR EXCAVATOR SITUATED OVER THE CHAMBERS.

   STORMTECH RECOMMENDS 3 BACKFILL METHODS:
   - STONESHOOTER LOCATED OFF THE CHAMBER BED.
   - BACKFILL AS ROWS ARE BUILT USING AN EXCAVATOR ON THE FOUNDATION STONE OR SUBGRADE.
   - BACKFILL FROM OUTSIDE THE EXCAVATION USING A LONG BOOM HOE OR EXCAVATOR.
4. THE FOUNDATION STONE SHALL BE LEVELED AND COMPACTED PRIOR TO PLACING CHAMBERS.
5. JOINTS BETWEEN CHAMBERS SHALL BE PROPERLY SEATED PRIOR TO PLACING STONE.
6. MAINTAIN MINIMUM - 9" (230 mm) SPACING BETWEEN THE CHAMBER ROWS.
7. INLET AND OUTLET MANIFOLDS MUST BE INSERTED A MINIMUM OF 12" (300 mm) INTO CHAMBER END CAPS.
8. EMBEDMENT STONE SURROUNDING CHAMBERS MUST BE A CLEAN, CRUSHED, ANGULAR STONE 3/4-2" (20-50 mm) MEETING THE AASHTO M43 DESIGNATION OF #3 OR #4.
9. STONE SHALL BE BROUGHT UP EVENLY AROUND CHAMBERS SO AS NOT TO DISTORT THE CHAMBER SHAPE. STONE DEPTHS SHOULD NEVER DIFFER BY MORE THAN 12" (300 mm) BETWEEN ADJACENT CHAMBER ROWS.
10. STONE MUST BE PLACED ON THE TOP CENTER OF THE CHAMBER TO ANCHOR THE CHAMBERS IN PLACE AND PRESERVE ROW SPACING.
11. ADS RECOMMENDS THE USE OF "FLEXSTORM CATCH IT" INSERTS DURING CONSTRUCTION FOR ALL INLETS TO PROTECT THE SUBSURFACE STORMWATER MANAGEMENT SYSTEM FROM CONSTRUCTION SITE RUNOFF.

NOTES FOR CONSTRUCTION EQUIPMENT

1. STORMTECH MC-4500 CHAMBERS SHALL BE INSTALLED IN ACCORDANCE WITH THE "STORMTECH MC-3500/MC-4500 CONSTRUCTION GUIDE".
2. THE USE OF EQUIPMENT OVER MC-4500 CHAMBERS IS LIMITED:
   - NO EQUIPMENT IS ALLOWED ON BARE CHAMBERS.
   - NO RUBBER TIRED LOADER, DUMP TRUCK, OR EXCAVATORS ARE ALLOWED UNTIL PROPER FILL DEPTHS ARE REACHED IN ACCORDANCE WITH THE "STORMTECH MC-3500/MC-4500 CONSTRUCTION GUIDE".
   - WEIGHT LIMITS FOR CONSRUCTION EQUIPMENT CAN BE FOUND IN THE "STORMTECH MC-3500/MC-4500 CONSTRUCTION GUIDE".
3. FULL 36" (900 mm) OF STABILIZED COVER MATERIALS OVER THE CHAMBERS IS REQUIRED FOR DUMP TRUCK TRAVEL OR DUMPING.

USE OF A DOZER TO PUSH EMBEDMENT STONE BETWEEN THE ROWS OF CHAMBERS MAY CAUSE DAMAGE TO CHAMBERS AND IS NOT AN ACCEPTABLE BACKFILL METHOD. ANY CHAMBERS DAMAGED BY USING THE "DUMP AND PUSH" METHOD ARE NOT COVERED UNDER THE STORMTECH STANDARD WARRANTY.

CONTACT STORMTECH AT 1-888-892-2694 WITH ANY QUESTIONS ON INSTALLATION REQUIREMENTS OR WEIGHT LIMITS FOR CONSTRUCTION EQUIPMENT.

©2015 ADS, INC.

CONCEPTUAL LAYOUT

(59) STORMTECH MC-4500 CHAMBERS
(10) STORMTECH MC-4500 END CAPS
INSTALLED WITH 12 " COVER STONE, 9 " BASE STONE, 40% STONE VOID
INSTALLED SYSTEM VOLUME: 11659 CF
AREA OF SYSTEM: 2843 **FT²**
PERIMETER OF SYSTEM: 221 **FT**

COMPUTER GENERATED CONCEPTUAL LAYOUT - NOT FOR CONSTRUCTION

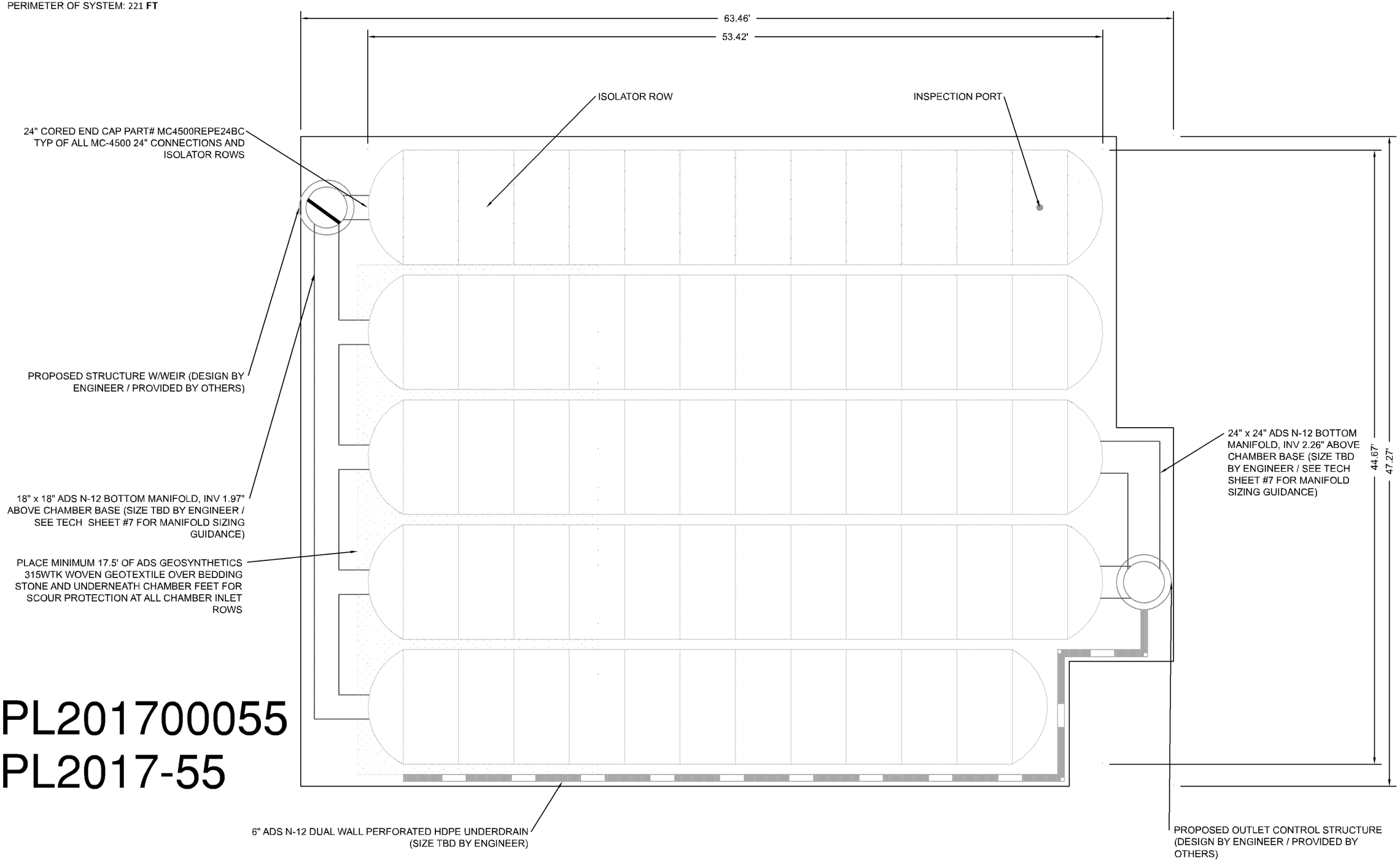

PL201700055
PL2017-55

Embassy Suites - International Airport
Bloomington, MN

DATE: 03/20/2017 | DRAWN: jm
PROJECT #: Tool | CHECKED: ---

REV	DRW	CHK	DESCRIPTION

StormTech® Detention • Retention • Water Quality
70 INWOOD ROAD, SUITE 3 | ROCKY HILL | CT | 06067
860-529-8188 |888-892-2694 | WWW.STORMTECH.COM

ADS® ADVANCED DRAINAGE SYSTEMS, INC.
4640 TRUEMAN BLVD
HILLIARD, OH 43026
1-800-733-7473

NOT TO SCALE

THIS DRAWING HAS BEEN PREPARED BASED ON INFORMATION PROVIDED TO ADS UNDER THE DIRECTION OF THE SITE DESIGN ENGINEER OR OTHER PROJECT REPRESENTATIVE. THE SITE DESIGN ENGINEER SHALL REVIEW THIS DRAWING PRIOR TO CONSTRUCTION. IT IS THE ULTIMATE RESPONSIBILITY OF THE SITE DESIGN ENGINEER TO ENSURE THAT THE PRODUCT(S) DEPICTED AND ALL ASSOCIATED DETAILS MEET ALL APPLICABLE LAWS, REGULATIONS, AND PROJECT REQUIREMENTS.

□□□□□T□□L□ □□LL M□T□□□□L□□□T□□MT□□□ M□□□□□□ □□□M□□□ □□□T□M□

MAT□R□AL L□CAT□□□□		□□SCR□PT□□□	AASHT□ MAT□R□AL CLASS□F□CAT□□□S	C□MPACT□□□□ □□□□□SIT□ R□Q□□R□M□□T
□	□ L LL□F LL MAT□R□AL F□R LA□□ R STARTS FR□M TH□ T□P F TH □C□LA R T□ TH□ B□TT□M □F FL□□□BL□ PA□□M□□T □R □□PA□□□ F□□SH□□ GRA□□ AB□□□. □□T□ THAT PA□□M□□T S□BBAS□ MA□ B□ PART □F TH□ □□LA□□R	A □□S□□L R□C MAT□R□ALS AT □□□S□LS R P R □G□□ □R□S PLA□S. CH□C□ PLA□S F R PA□□ M□□T S BGRA □□R Q□R□M□□TS.	□□A	PR□PAR□ P□R S T□ □SIG□□□ G□□□ R□S PLA S. PA □□□STALLAT□□□S MA HA STR□G T MAT R AL A □PR□PARAT□□□R□Q□R M□□ TS.
C	□T□L□□LL F□LL MAT R AL F R LA □R□C□ STARTS FR□M TH□ T□P F TH □MB□ M□ T ST □□(B□LA □R) T□ 24" (600 mm) AB TH□ T□P □F TH□ CHAMB□R. □□T□ THAT PA□□M□□T S□BBAS□ MA□ B□ A PART □F TH□ □C□LA□□R.	GRA□□ LAR □LL-GRA □□ S □AGGR□GAT M T□R S□ 35□ F□□□S□R PR C□SS□ AGGR□GAT . M□ST PA□□M□□T S□BBAS□ MAT□R□ALS CA□ B□ □S□□ □□ L□□□ □F TH□S LA□□R.	AASHT□ M145[1] A-1□A-2-4□A-3 □R AASHT□ M43[1] 3□357□4□467□5□56□57□6□67□68□7□78□8□89□ 9 10	B G□□□ C□MPACT□□ S AFT□R 24" (600 mm) □F MAT R AL □□□ R TH CHAMB□RS S R ACH . C□MPACT A□□ T□□□AL LA□□ RS □□ 12" (300 mm) MA□L FTS T□□ A M□□. 95 PR□CT R □ S T□F R □ LL GRA□□□ MAT□R□AL A□□ 95□ R□LAT□□ □□□S□T□ F□R PR□C□SS□□ AGGR□GAT□ MAT□R□ALS.
B	□M M □□T□□T □□□ □F LL S□RR□□ □□□G TH CHAMB□RS FR□M TH□ F□□□□AT□□□ ST□□□ (□A□ LA□□R) T□ TH□ □C□LA□□R AB□□□.	CL□A□□CR□SH□□□A□G□LAR ST□□□□□□M□AL S□□ □STR□B□T□□□ B□T□ □□□ 3/4-2 □□CH (20-50 mm)	AASHT□ M43[1] 3□4	□□C MPACT□□ R□Q□□R□□□.
A	□□□□ □□T□□□□T □□□□F LL B L CHAMB RS FR□M TH□ S□BGRA□□ □P T TH F □□T (B TT M) □F TH□ □CHAMB□R.	CL A □CR□SH □□ A G□LAR ST□□□ □□ M AL S□□ STR B T□□ B T□□□□ 3/4-2 □□CH (20-50 mm)	AASHT□ M43[1] 3□4	PLAT□□C MPACT R R□LL T ACH□□□□ A FLAT SURFACE. [2,3]

PL□AS□ □T□

1. TH LIST □AASHT □□ S□G AT□□ S AR□□F R GRA AT□□ S□□□L . TH□ ST□□□ M ST ALS B□□CL□A □CR□SH□□□ A□G LAR. F R AMPL □A SP□C□F CAT□□□□ F□R □4 ST □□□ □□□L STAT "CL A □CR□SH □□ A□G LAR □□. 4 (AASHT□ M43) ST □□".
2. ST RMT CH C□MPACT R□Q□R□M □TS AR□ M□T F□R A L CAT □ MAT□R□ALS □H □□PLAC□□ A □C□MPACT□□ □□9" (230 mm) (MA□) LIFTS S G T F LL C□ □RAG S□□TH A □BRAT□R C□MPACT R.
3. □H R □F LTRAT□□□S□RFAC S MA B□ C□MPR□M S□ B C□MPACT □F□R STA AR□□□ S□G L□A C□□□ T□□ S A FLAT S□RFAC MA B ACH□□□ □□B RA□□□G R RAGG G□□TH□□T C MPACT□□□ □Q□PM□□T. F□R SP□C□AL L□A□ □□S□G□S□C□□TACT ST□RMT□CH F□R C□MPACT□□□ R□Q□R□M□□TS.

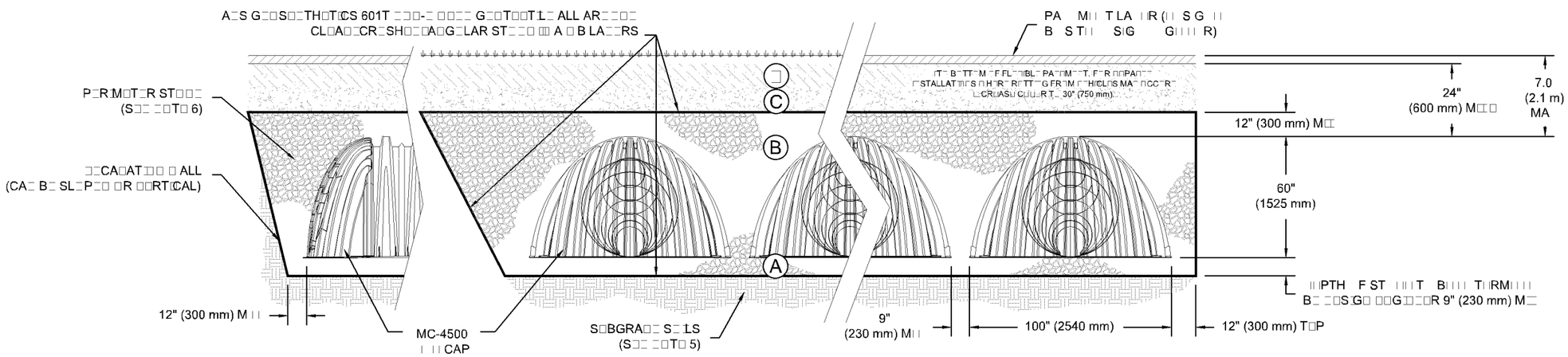

□□T□□□

1. MC-4500 CHAMB□RS SHALL C□□F□RM T□ TH□ R□Q□R□M□□TS □F ASTM F2418 "STA□□AR□ SP□C□F□CAT□□ F□R P□L□PR□P□L□□ (PP) C□RR□GAT□□ □ ALL ST□RM□ AT□R C□LL□CT□□ CHAMB□RS".
2. MC-4500 CHAMB□RS SHALL B □□ S G □□ □□ACC R□A□C□□□ TH ASTM F2787 "STA □□AR PRACT C F R STR CT RAL □S G□□□F TH□RM□PLAST C C RR GAT □□□□ALL ST RM□AT□R C□LL CT□□ CHAMB RS".
3. "ACC□PTABL□ F□LL MAT□R□ALS" TABL□ AB□□□ PR□□□□□S MAT□R□AL L□CAT□□ S□□□SCR□PT□□□S□GRA□AT□□ S□A□□ C□MPACT□□ R□Q□R□M□□TS F□R F□□□AT□□ □□MB□□M□□T□A□□ F□LL MAT□R□ALS.
4. TH "S T□□ □□SIG□□□ G□□□□ R" R□□F RS T TH□□□ G□□□□R R□SP□□SIBL F□R TH □S G□A□□□LA□□□□T□F TH□□ST□RMT□CH CHAMB□RS F R TH□S PR□□CT.
5. TH□ S T□ □□SIG□ □□G□□□R S R□SP□□SIBL F□R ASS□SS□G TH□ B□AR□G R□S□STA□C□ (ALL□□ ABL□ B□AR□G CAPAC□T□) □F TH□ S□BGRA□□ S□□LS A□□ TH□ □□PTH □F F□□□AT□□ ST□□□ □□TH C□S□□□RAT□□□F□R TH□ RA□G □F □P CT □S□□L M□ ST R C□□□ T□□□S.
6. P□R□M□T□R ST□□□ M□ST B□ □□T□□□□ H□R□□□TALL□ T□ TH□ □□CA□AT□□□ □ ALL F□R B□TH □□RT□CAL A□□ SL□P□□ □□CA□AT□□□ □ ALLS.
7. C□LA □R C□S PLAC □□ A □S□L MAT□R□AL CA□B PLAC□□ LA□□R □□P T□ TH□F □SH□□ GRA□□□. M□ST PA M□□ T S□BBAS□S□LS CA B□□ S □□T□R PLAC□TH MAT R AL R□Q□R□M □TS□F LA □R C□R AT TH□S T □S G□□□□G□□ □R□S□SCR T□□□.

PL201700055
PL2017-55

DS® ADVANCED DRAINAGE SYSTEMS, INC.
4640 TR MA□BL□
HILLIAR □H 43026
1-800-733-7473

SH□T
3 □F 6

Embassy Suites - International Airport
Bloomington, MN

□AT□□	03/20/2017	□RA□□	jm
PR□□CT	□□Tool	CH□C□□□	---

R	CH	□SCR□PT□□□□
R □□		

StormTech®
Detention • Retention • Water Quality
70 INWOOD ROAD, SUITE 3 | ROCKY HILL | CT | 06067
860-529-8188 | 888-892-2694

TH□S □RA□□G HAS B□□□ PR□PAR□□ BAS□□ □□□□F R MAT□□□ PR□□□□□□T A□S □□□R TH□□□R CT□□□F TH□S T□□□S G□□□R□G□□□□R □R□TH□R PR□□□□CT R□SP□□LS B L T□□F TH□S T□□□S G□□□L□G□□□R T□□□S□R□ TH□T TH□□PR□□□□CT(S) □□P CT□□□A□□□ALL ASS□C AT□□□□TA□S M□□T ALL APPL□CABL□ LA□S, S R□G□LAT□□S, S□AUL PR□□□CT R□QUIR□M□□TS.

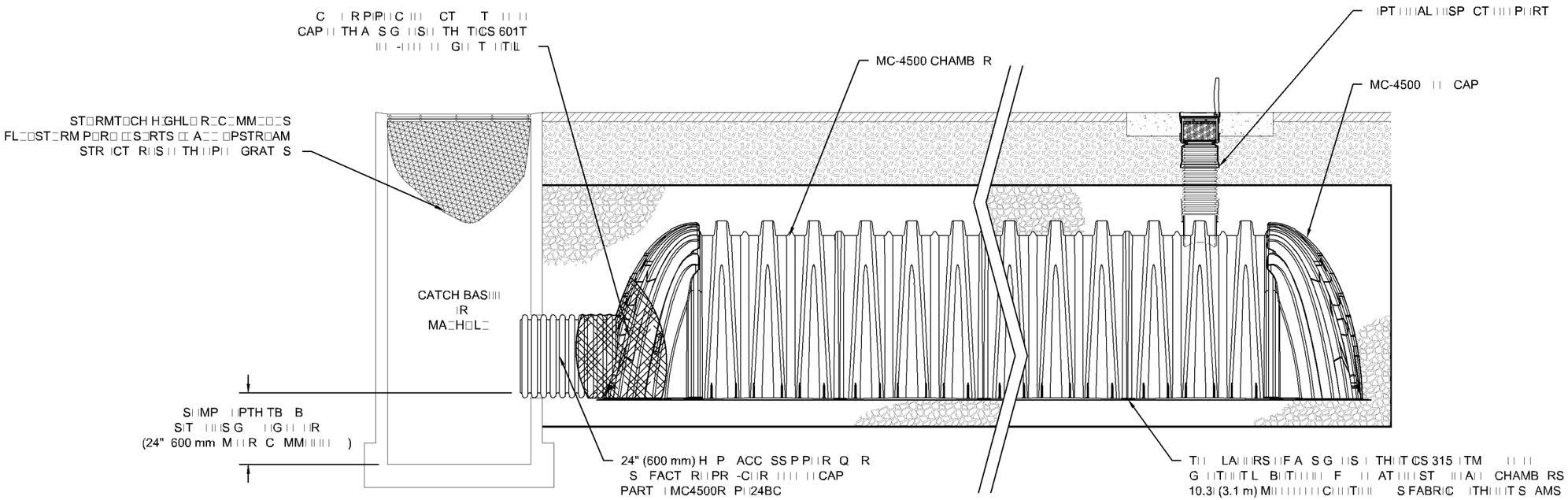

M L T TS

PL201700055

PL2017-55

T M T

ST P 1) SP CT S LAT R R F R S M T
A. SP CT P RTS (F PR S T)
A.1. R M P L PLAST L R A
A.2. R M A CL A FL ST RM F LT R F STALL
A.3. S G A FLASHL GHT A STA A R M AS R P TH F S M T A R C R MA T A C L G
A.4. L R A CAM RA T S LAT R R F R S AL SP CT F S M T L LS (PT AL)
A.5. F S M T S AT R AB 3" (80 mm) PR C T ST P 2. F T PR C T ST P 3.
B. ALL S LAT R R S
B.1. R M C R FR M STR CT R AT PSTR AM F S LAT R R
B.2. S G A FLASHL GHT SP CT TH S LAT R R THR GH TL T P P
i) M RR RS P L S R CAM RAS MA B S C T A A C F SPAC TR F T R G MA H L
ii) F LL SHA R G LAT S F R C F SPAC TR F T R G MA H L
B.3. F S M T S AT R AB 3" (80 mm) PR C T ST P 2. F T PR C T ST P 3.

ST P 2) CL A T S LAT R R S G TH T AC PR C SS
A. A F CL RT CL A G L TH R AR FAC G SPR A F 45" (1.1 m) R M R S PR F RR
B. APPL M LT PL PASS S F T AC T L BAC FL SH AT R S CL A
C. AC M STR CT R S MP AS R Q R

ST P 3) R PLAC ALL C RS GRAT S F LT RS A L S R C R BS R AT S A ACT S.

ST P 4) SP CT A CL A BAS S A MA H L S PSTR AM F TH ST RMT CH S ST M.

T

1. SP CT R 6 M THS R G TH F RST AR F P RAT . A ST TH SP CT T R AL BAS PR S BS R AT S F S M T ACC M LAT A H GH AT R L AT S.

2. C CT T G A ACT R G A ALL R H SP CT SH S THAT MA T A C S SSAR .

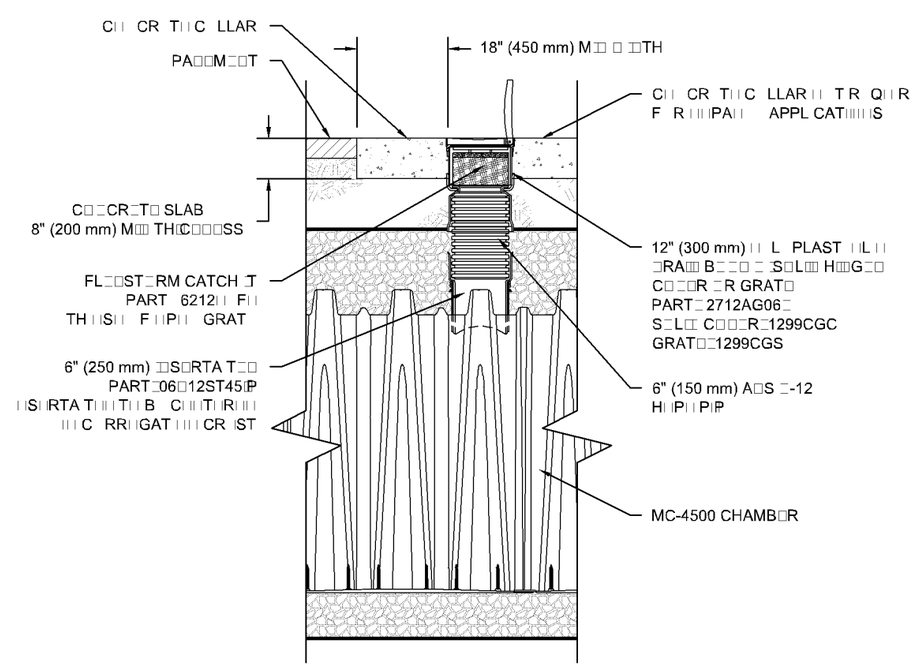

M " T T L

TS

Embassy Suites - International Airport
Bloomington, MN

DATE 03/20/2017 DRAWN BY jm
PROJECT Tool CHECKED BY ---

R	R	CH	DESCRIPTION

StormTech®
Detention • Retention • Water Quality
70 INWOOD ROAD, SUITE 3 | ROCKY HILL, CT | 06067
860-529-8188 | 888-892-2694

ADS®
ADVANCED DRAINAGE SYSTEMS, INC.
4640 TRUEMAN BLVD
HILLIARD, OH 43026
1-800-733-7473

THIS DRAWING HAS BEEN PREPARED BASED ON INFORMATION PROVIDED BY STORMTECH AND ADS. THIS DRAWING SHALL NOT BE MODIFIED WITHOUT THE EXPRESS WRITTEN CONSENT OF STORMTECH AND ADS. IT IS THE CONTRACTOR, OWNER, ENGINEER AND/OR OTHER PARTIES TO WHOM THIS DRAWING IS PROVIDED TO REVIEW THE DRAWING IN ITS ENTIRETY AND ASSUME RESPONSIBILITY FOR ALL DECISIONS AND ACTIONS BASED ON THIS DRAWING. THE CONTRACTOR SHALL VERIFY ALL APPLICABLE DIMENSIONS, ELEVATIONS, SLOPES, INVERTS, ETC. PRIOR TO CONSTRUCTION. IT IS THE CONTRACTOR'S RESPONSIBILITY TO ASSUME THAT ALL ASSOCIATED WORK WILL FIT PROPERLY.

PL201700055
PL2017-55

□□□□□□□□□□□□ □□T□□L
□TS

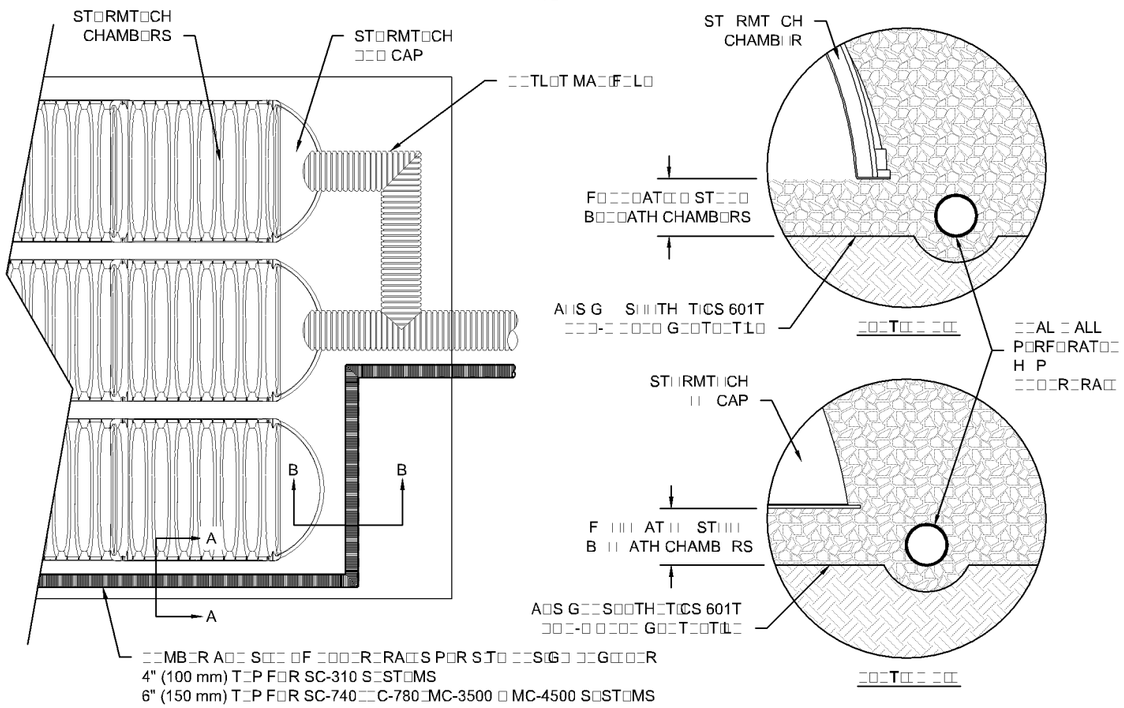

□□□□□□□□□□□□ □□T□□L
□TS

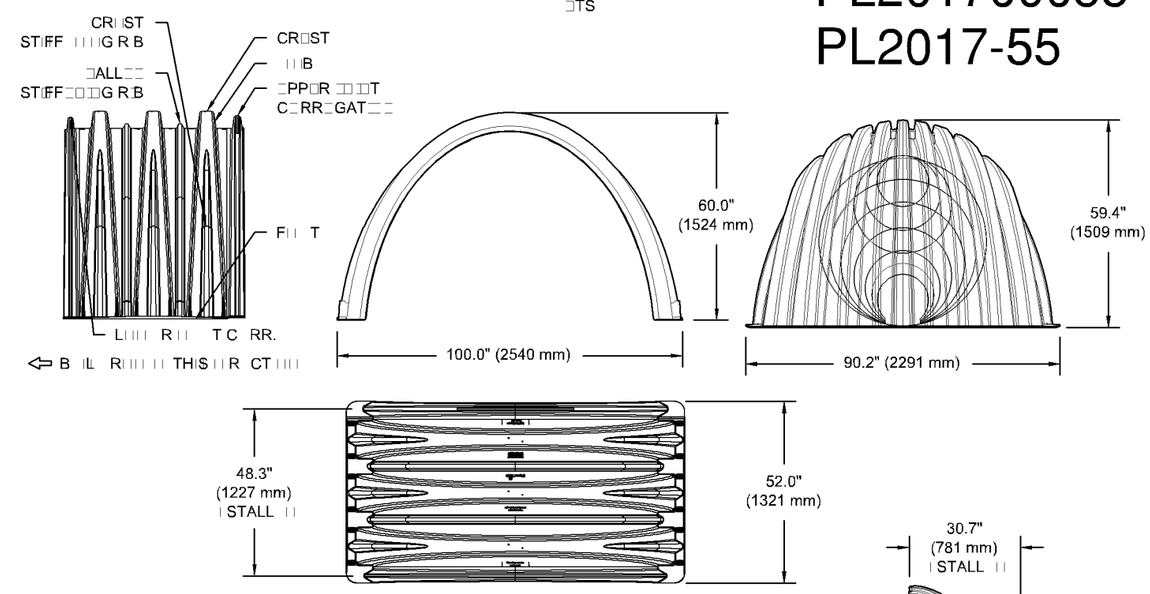

□□□M□□□L□□ □□M□□ □□□□ □□□□□□□T□□□□		
S□□□ (□ □H □ □STALL□□ L□□GTH)	100.0" □ 60.0" □ 48.3"	(2540 mm □ 1524 mm □ 1227 mm)
CHAMB□R ST□RAG□	106.5 C□B□C F□□T	(3.01 m³)
M□□M□M □STALL□□ ST□RAG□□	162.6 C□B□C F□□T	(4.60 m³)
□ □GHT	130.0 lbs.	(59.0 kg)

□□M□□□L□□ □□□□ □□□□□ □□□□□□□T□□□□		
S□□□ (□ □H □ □STALL□□ L□□GTH)	90.2" □ 59.4" □ 30.7"	(2291 mm □ 1509 mm □ 781 mm)
□□□ CAP ST□RAG□	35.7 C□B□C F□□T	(1.01 m³)
M□□M□M □STALL□□ ST□RAG□□	108.7 C□B□C F□□T	(3.08 m³)
□ □GHT	135.0 lbs.	(61.2 kg)

□ASS□M□S 12" (305 mm) ST□□□ AB□□□□9" (229 mm) ST□□□ F□□□□AT□□ A□□ B□T□ □□□ CHAMB□RS□ 12" (305 mm) ST□ □□ P□R□M□T□R □□ FR□□T □F □□□ CAPS A□□ 40□ ST□□□ P□R□S□T□.

□□□□T□□L□□□□T□□□□□□L
□TS

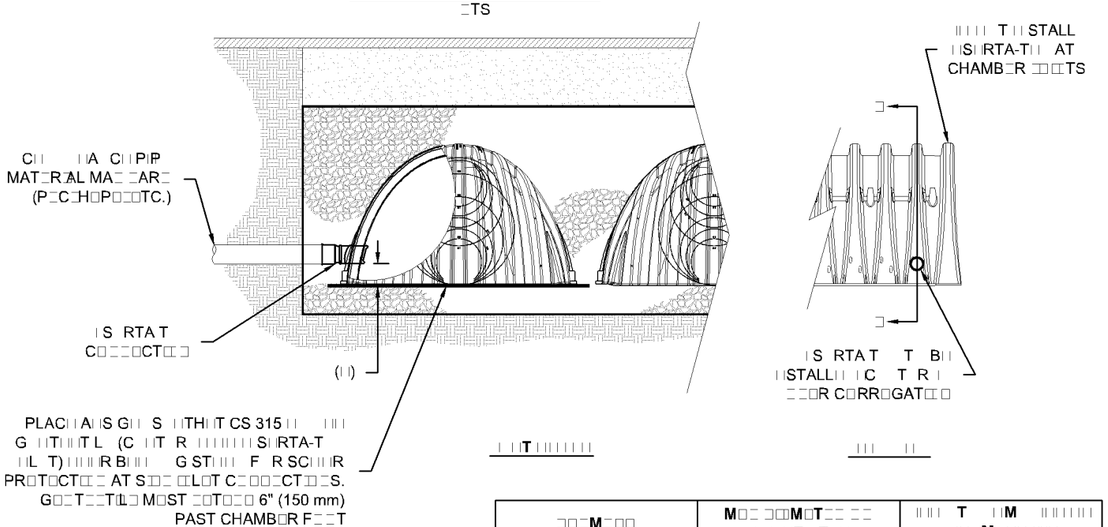
□□□□ T□□STALL □□S□RTA-T□□ AT CHAMB□R □□□TS
C□□ □□A C□□P□P MAT□R□AL MA□ □AR□ (P□C□H□P□□□TC.)
□S RTA T C□□□□CT□□□
(□□)
PLAC□□A□S G□□ S□□TH□T CS 315□□ □□□ G□□T□□T L (C□□T R □□□□□□□S□RTA-T □□L T)□□□□R B□□□ G ST□□□ F R SC□□□R PR□T□CT□□ □ AT S□□ □□LOT C□□□CT□□S. G□□T□□T□L□ M□ST □□T□□ 6" (150 mm) PAST CHAMB□R F□□T
□S RTA T T B□□ □STALL□□ □C T R □ □□R C□RR□GAT□□□
□□□T□□□□□□□
□□□□□□□□□□
□□□□□□□□□□□

PL201700055
PL2017-55

M□□□□□□□□ □□□ □□□ □□□□□T□□□ □□T□□L
TS

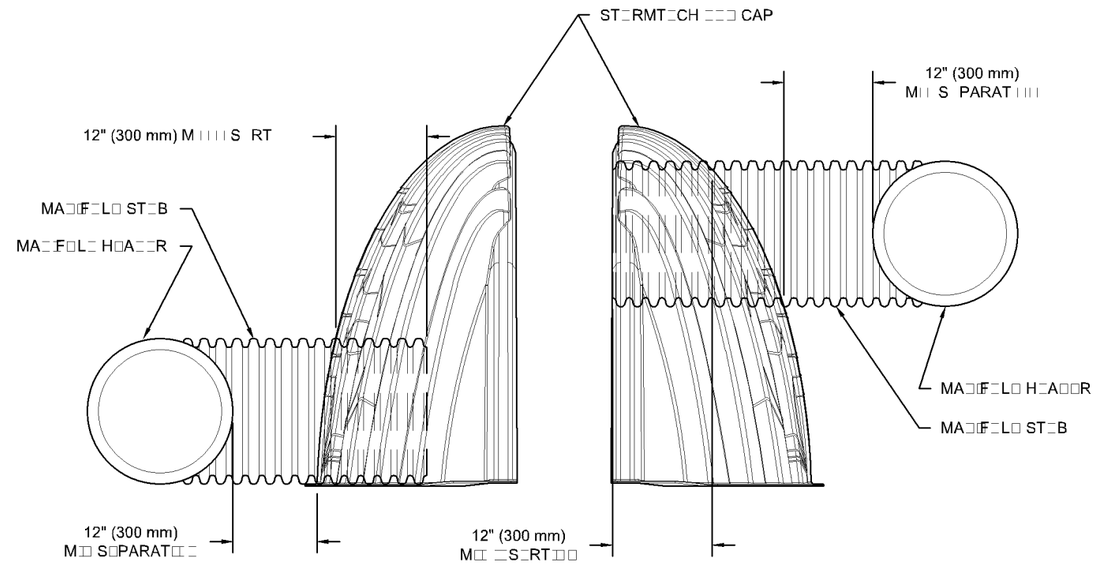

□□T□□MA□F□L□ST□B M□□ST B LA□□H R□□ TAL
F R A PR□□P□R F T □ □□ CAP□□P G.

Embassy Suites - International Airport
Bloomington, MN

□AT□□	03/20/2017
□R□□	jm
PR□□CT □□Tool	CH□C□□□□ ---

R □□	R	CH □	□SCR□PT□□□□

StormTech®
Detention•Retention•Water Quality
70 INWOOD ROAD, SUITE 3 | ROCKY HILL | CT | 06067
860-529-8188 | 888-892-2694

ADS 4640 TR □MA□□BL□□
HILLIAR □□ H 43026
1-800-733-7473
ADVANCED DRAINAGE SYSTEMS, INC.

TH S □RA□ □TG HAS B□□□n PR□□PAR□□ BAS□□ □□□F□RMAT□□ □PR□□□□□T□ A□S □□□□□R TH□ □CT□□□ □F TH□ S□T □□□S G□ □□G□□□R SHALL R□□□□ TH S □RA□□TG □□□R □□TH□R PR□□□CT R□□□TAT□□□. TH□S□T□□□□S G□□□G□□□R □□□R □CT□□□ □F TH□ □□□STR□CT□□□. IT IS TH□□□LT MAT□□
R□SP□□S B L□T□□ □F TH□ S□T □□S G□ □□G□□□R T□□□□SUR□□ THAT TH□ PR□□□□□CT(S) □□P CT□□□A□□□ ALL ASS□C AT□□□□□TALS M□□□T ALL APPL□CABL□ LA□□S, R□G□□LAT□□S, SUAL PR□□□□CT R□QUIR□M□NTS.

SH□□T
6 □F 6

PL201700055 PL2017-55

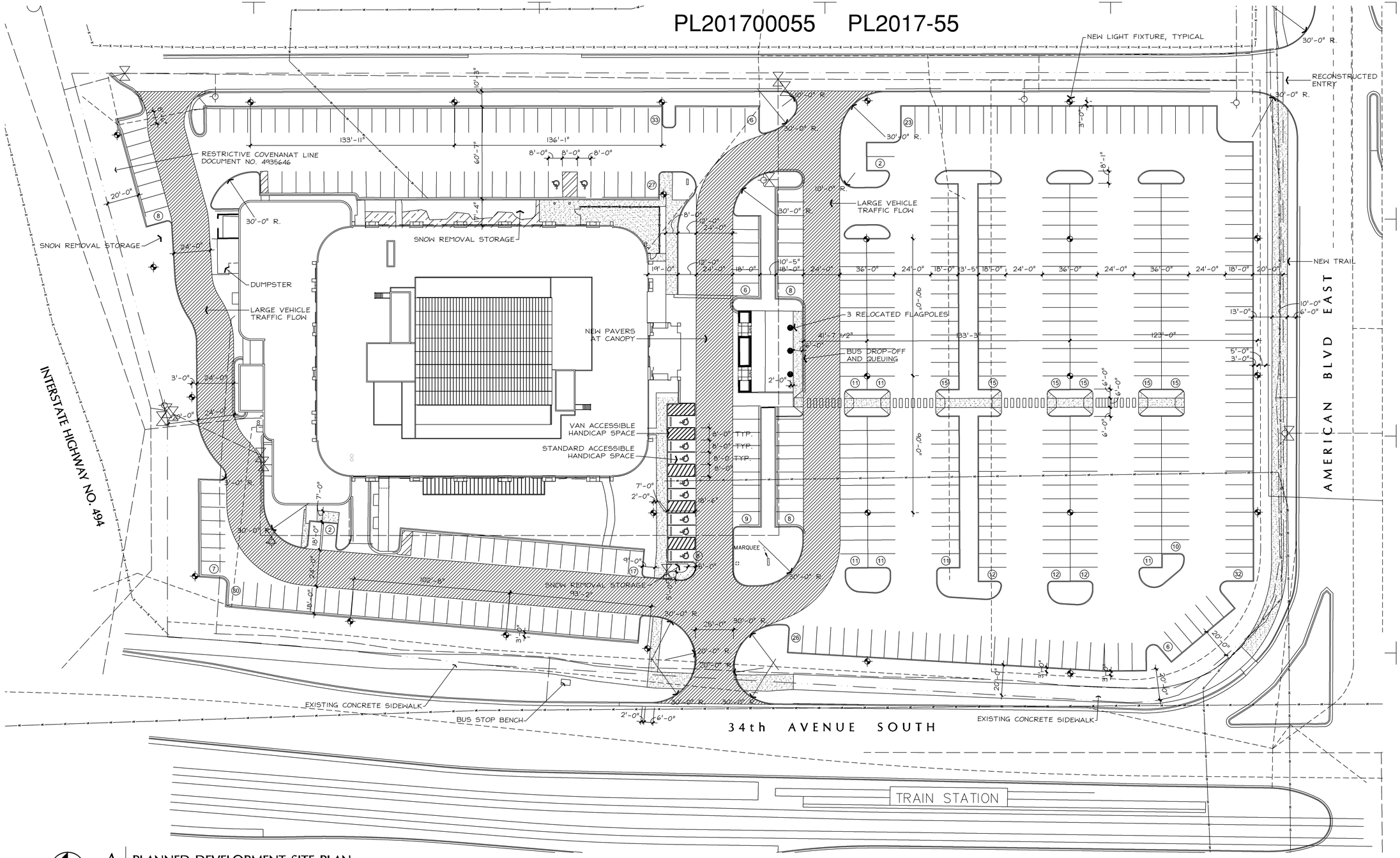

A PLANNED DEVELOPMENT SITE PLAN

1" = 30'-0" 0 15' 30' 60'

I HEREBY CERTIFY THAT THIS PLAN, SPECIFICATION, OR REPORT WAS PREPARED BY ME OR UNDER MY DIRECT SUPERVISION AND THAT I AM A DULY LICENSED LANDSCAPE ARCHITECT UNDER THE LAWS OF THE STATE OF MINNESOTA.

DATE: 13 APRIL 2017 LICENCE NUMBER 54499

B SITE LEGEND

- NEW CONCRETE SIDEWALK
- BUILDING EXPANSION
- NEW ASPHALT PAVING
- NEW LIGHT POLE
- (15) REVISION DESCRIPTION KEY

PREPARED UNDER THE SEAL OF EDWARD R. YOST.

ISSUED FOR DESIGN REVIEW, NOT FOR PERMITTING, OR CONSTRUCTION

FELCOR LODGING TRUST

EMBASSY SUITES
7901 34TH AVE S, BLOOMINGTON, MN 55425
AIRPORT SOUTH
MINNEAPOLIS, MINNESOTA

CARRELL PARTNERS & YOST architecture
5646 Milton Street
Suite 888
Dallas, Texas 75206
214.953.0042
214.953.0702 FAX
cpy@cpyarch.com
www.cpyarch.com

DRAWN BY:	DG
CHECKED BY:	MSK
DATE:	04.07.2017
REVISIONS:	
PROJECT NO.:	16031
SHEET NO.:	PD 1

PL201700055
PL2017-55

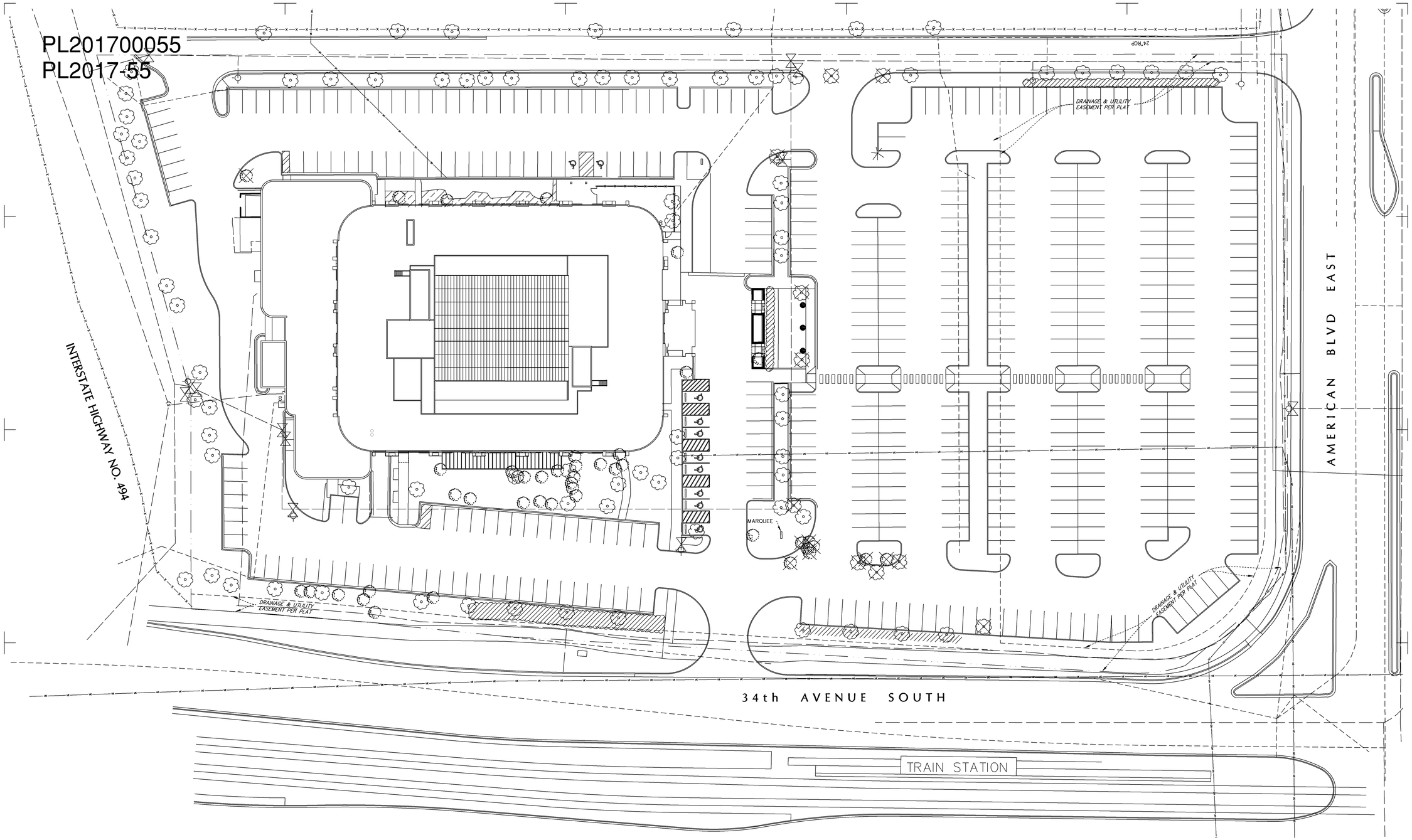

A LANDSCAPE DEMOLITION PLAN

1" = 30'-0" 0 15' 30' 60'

I HEREBY CERTIFY THAT THIS PLAN, SPECIFICATION, OR REPORT WAS PREPARED BY ME OR UNDER MY DIRECT SUPERVISION AND THAT I AM A DULY LICENSED LANDSCAPE ARCHITECT UNDER THE LAWS OF THE STATE OF MINNESOTA.

DATE: 13 APRIL 2017 LICENCE NUMBER 54499

PL201700055
PL2017-55

B LEGEND

- EXISTING TREE TO REMAIN
- EXISTING TREE TO BE REMOVED

PREPARED UNDER THE SEAL OF EDWARD R. YOST.

ISSUED FOR DESIGN REVIEW, NOT FOR PERMITTING, OR CONSTRUCTION

FELCOR LODGING TRUST

EMBASSY SUITES

7901 34TH AVE S, BLOOMINGTON, MN 55425

AIRPORT SOUTH

MINNEAPOLIS, MINNESOTA

● CARRELL
■ PARTNERS
▼ & YOST
architecture

5646 Milton Street
Suite 888
Dallas, Texas 75206
214.953.0042
214.953.0702 FAX
cpy@cpyarch.com
www.cpyarch.com

DRAWN BY:	DG
CHECKED BY:	MSK
DATE:	04.07.2017
REVISIONS:	
PROJECT NO.:	16031
SHEET NO.:	L101

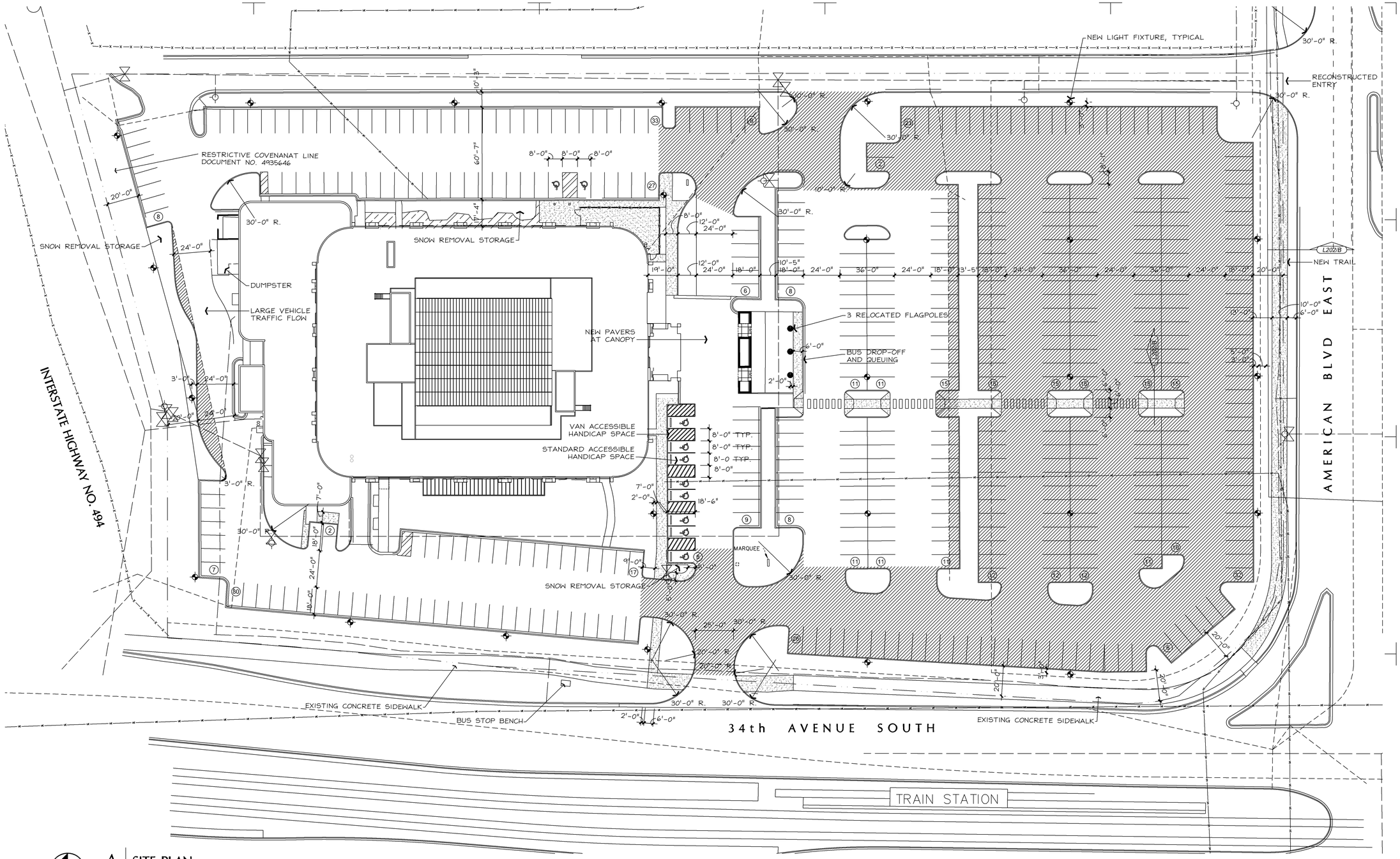

A SITE PLAN

1" = 30'-0" 0 15' 30' 60'

I HEREBY CERTIFY THAT THIS PLAN, SPECIFICATION, OR REPORT WAS PREPARED BY ME OR UNDER MY DIRECT SUPERVISION AND THAT I AM A DULY LICENSED LANDSCAPE ARCHITECT UNDER THE LAWS OF THE STATE OF MINNESOTA.

DATE: 13 APRIL 2017 LICENCE NUMBER 54499

B SITE LEGEND

- NEW CONCRETE SIDEWALK
- BUILDING EXPANSION
- NEW ASPHALT PAVING
- NEW LIGHT POLE
- (15) REVISION DESCRIPTION KEY

PL201700055
PL2017-55

PREPARED UNDER THE SEAL OF EDWARD R. YOST.

ISSUED FOR DESIGN REVIEW, NOT FOR PERMITTING, OR CONSTRUCTION

FELCOR LODGING TRUST

EMBASSY SUITES
7901 34TH AVE S, BLOOMINGTON, MN 55425
AIRPORT SOUTH
MINNEAPOLIS, MINNESOTA

● CARRELL
■ PARTNERS
▼ & YOST
architecture

5646 Milton Street
Suite 888
Dallas, Texas 75206
214.953.0042
214.953.0702 FAX
cpy@cpyarch.com
www.cpyarch.com

DRAWN BY:	DG
CHECKED BY:	MSK
DATE:	04.07.2017
REVISIONS:	
PROJECT NO.:	16031
SHEET NO.:	L201

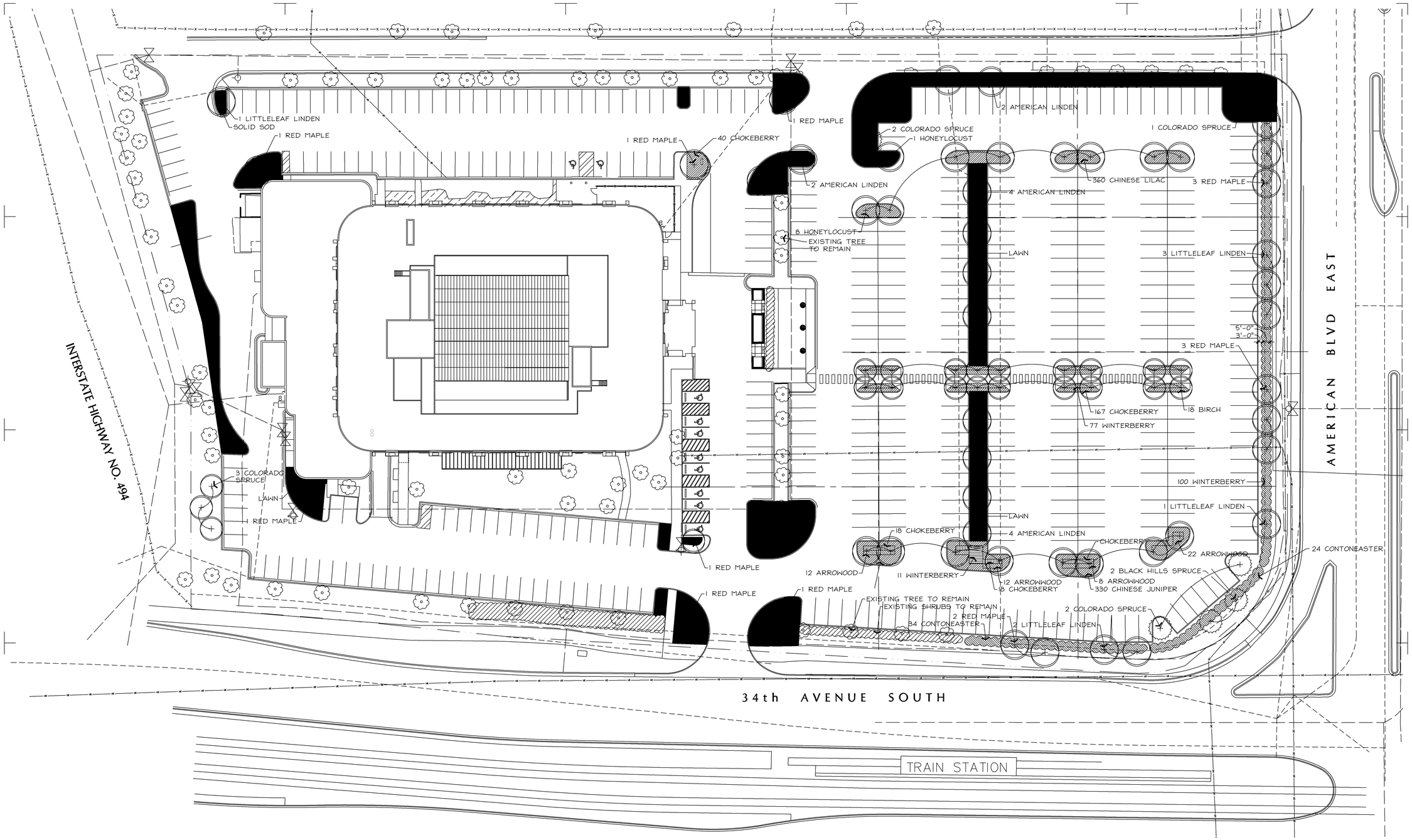

A LANDSCAPE PLANTING PLAN

1" = 30'-0" 0 15' 30' 60'

I HEREBY CERTIFY THAT THIS PLAN, SPECIFICATION, OR REPORT WAS PREPARED BY ME OR UNDER MY DIRECT SUPERVISION AND THAT I AM A DULY LICENSED LANDSCAPE ARCHITECT UNDER THE LAWS OF THE STATE OF MINNESOTA.

DATE: 13 APRIL 2017 LICENCE NUMBER 54499

PL201700055
PL2017-55

B PLANT NOTES

78,653 SITE SQUARE FEET
31 TREES REQUIRED - 80 TREES PROVIDED
79 SHRUBS REQUIRED - 140 SHRUBS PROVIDED
PLANT MATERIAL TYPE AND LOCATION MAY BE MODIFIED WITHOUT PD PLAN RESUBMISSION OR APPROVAL.

C LANDSCAPE LEGEND

- EXISTING DECIDUOUS OR EVERGREEN TREE
- EXISTING JUNIPER SHRUBS
- PROPOSED EVERGREEN TREE
- PROPOSED MEDIUM DECIDUOUS TREE
- PROPOSED LARGE DECIDUOUS TREE
- NEW JUNIPER PARKING LOT SCREENING SHRUBS

PREPARED UNDER THE SEAL OF EDWARD R. YOST.

ISSUED FOR DESIGN REVIEW, NOT FOR PERMITTING, OR CONSTRUCTION

FELCOR LODGING TRUST

EMBASSY SUITES
7901 34TH AVE S, BLOOMINGTON, MN 55425
AIRPORT SOUTH
MINNEAPOLIS, MINNESOTA

● CARRELL
■ PARTNERS
▼ & YOST
architecture

5646 Milton Street
Suite 888
Dallas, Texas 75206
214.953.0042
214.953.0702 FAX
cpy@cpyarch.com
www.cpyarch.com

DRAWN BY:	DG
CHECKED BY:	MSK
DATE:	04.07.2017
REVISIONS:	
PROJECT NO.:	16031
SHEET NO.:	L301

PL201700055
PL2017-55

A | PREPARATION GENERAL NOTES

1. PLAN PREPARED BY:

   MICHAEL S. KENDALL
   KENDALL + LANDSCAPE ARCHITECTURE
   8150 NORTH CENTRAL EXPRESSWAY
   SUITE M2025
   DALLAS, TEXAS 75206
   PHONE: (214) 739-3226
   E-MAIL: MIKE@KENDALL7.COM
   MINNEAPOLIS LANDSCAPE ARCHITECT LICENSE NO. 54499

2. ALL AREAS SHALL BE IRRIGATED BY A LICENCES IRRIGATOR WITH AN AUTOMATIC UNDERGROUND IRRIGATION SYSTEM PROVIDING 100% COVERAGE.
3. ALL REQUIRED TREES FROM THE CITY APPROVED LISTING.

B | PLANTING GENERAL NOTES

1. ALL SOIL EXCAVATION MAY BE DISPOSED OF ON SITE.
2. IF A LIVE UTILITY IS ENCOUNTERED DURING EXCAVATION, CONTACT OWNER'S REPRESENTATIVE.
3. SEE PLANTING SPECIFICATIONS FOR A COMPLETE DESCRIPTION OF PLANT MATERIAL AND INSTALLATION.
4. ALL BEDS MUST BE LAID OUT AND APPROVED PRIOR TO THE INSTALLATION OF THE IRRIGATION FOR COORDINATION.
5. ALL PLANT MATERIAL SHALL BE STAKED AND APPROVED BY THE LANDSCAPE ARCHITECT PRIOR TO PLANT INSTALLATION.
6. ALL PLANTING DETAILS ARE TYPICAL.
7. ALL DISTURBED AREAS WITHIN THE PROJECT LIMITS MUST BE EITHER HYDROMULCHING OR SOLID SODDED UNLESS NOTED.

C | TREE PRESERVATION NOTES

CONTRACTOR SHALL ADHERE TO THE FOLLOWING TREE PROTECTION MEASURES:

1. THE CONTRACTOR SHALL ERECT A PLASTIC MESH FENCE A MINIMUM OF FOUR (4') FEET IN HEIGHT AROUND EACH TREE OR GROUP OF TREES TO PREVENT THE PLACEMENT OF DEBRIS OR FILL WITHIN THE DRIP LINE.
2. DURING THE CONSTRUCTION PHASE OF DEVELOPMENT, THE CONTRACTOR SHALL PROHIBIT CLEANING, PARKING OR STORAGE OF EQUIPMENT OR MATERIALS UNDER THE CANOPY OF ANY TREE OR GROUP OF TREES BEING PRESERVED. THE CONTRACTOR SHALL NOT ALLOW THE DISPOSAL OF ANY WASTE MATERIAL SUCH AS, BUT NOT LIMITED TO, PAINT, OIL, SOLVENTS, ASPHALT, CONCRETE, MORTAR, ETC. IN THE CANOPY AREA.
3. NO ATTACHMENTS OR WIRES OF ANY KIND, OTHER THAT THOSE OF A PROTECTIVE NATURE, SHALL BE ATTACHED TO ANY TREE.
4. NO FILL OR EXCAVATION MAY OCCUR WITHIN THE DRIP LINE OF A TREE TO BE PRESERVED.

D | PLANT LISTING

ALL SIZES SHOWN ARE MINIMUM. SMALLER CONTAINERS MEETING THE SPECIFIED HEIGHT AND SPREAD WILL NOT BE ACCEPTED.
IF QUANTITIES ARE SHOWN, CONTRACTOR IS RESPONSIBILE FOR VERIFYING QUANTITIES. PLAN REFERENCES GOVERN.

BOTANIC NAME	COMMON NAME	SIZE	DESCRIPTION	QUANTITY
LARGE TREES				
ACER RUBRUM	RED MAPLE	24" BOX, 3"- 3 1/2" CALIPER, 8' - 9' HEIGHT, 4'-5' SPREAD	SINGLE STRAIGHT LEADER	14
GLEDITISIA TRIANCANTHOS	HONEYLOCUST	24" BOX, 3"- 3 1/2" CALIPER, 8' - 9' HEIGHT, 4'-5' SPREAD	SINGLE STRAIGHT LEADER.	9
TILIA AMERICANA	AMERICAN LINDEN	24" BOX, 3"- 3 1/2" CALIPER, 8' - 9' HEIGHT, 4'-5' SPREAD	SINGLE STRAIGHT LEADER.	12
TILIA CORDATA	LITTLELEAF LINDEN	24" BOX, 3"- 3 1/2" CALIPER, 8' - 9' HEIGHT, 4'-5' SPREAD	SINGLE STRAIGHT LEADER.	7
PICEA GLAUCA DENSATA	BLACK HILLS SPRUCE	24" BOX, 3"- 3 1/2" CALIPER, 8' - 9' HEIGHT, 4'-5' SPREAD	SINGLE STRAIGHT LEADER.	2
PICEA PUNGENS	COLORADO SPRUCE	24" BOX, 3"- 3 1/2" CALIPER, 8' - 9' HEIGHT, 4'-5' SPREAD	SINGLE STRAIGHT LEADER.	8
BETULA SPP	BIRCH	24" BOX, 3"- 3 1/2" CALIPER, 8' - 9' HEIGHT, 4'-5' SPREAD	SINGLE STRAIGHT LEADER.	18
SHRUBS / GROUNDCOVER				
ILEX VERTICULLATA	WINTERBERRY	3 GALLON	36" ON CENTER	188
COTONEASTER LUCIDUS	COTONEASTER	3 GALLON	42" ON CENTER	205
JUNIPER CHINENSIS	CHINESE JUNIPER	1 GALLON	24" ON CENTER	330
ARONIA MELANOCARPA	CHOKEBERRY	1 GALLON	24" ON CENTER	94
VIBURNUM DENTATUM	ARROWOOD	3 GALLON	30" ON CENTER	54
SYRING X CHINESIS 'LILAC SUNDAY'	CHINESE LILAC	1 GALLON	18" ON CENTER	360

SOD

MIXTURE OF KENTUCKY BLUEGRASS AND FINE FESCUE

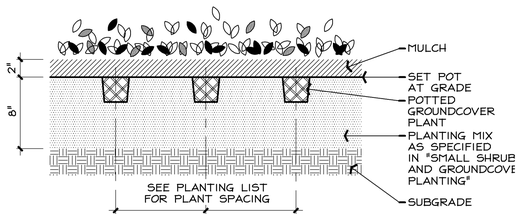

J | GROUNDCOVER PLANTING - SECTION

1 1/2" = 1'-0" 0 1'

I HEREBY CERTIFY THAT THIS PLAN, SPECIFICATION, OR REPORT WAS PREPARED BY ME OR UNDER MY DIRECT SUPERVISION AND THAT I AM A DULY LICENSED LANDSCAPE ARCHITECT UNDER THE LAWS OF THE STATE OF MINNESOTA.

DATE: 13 APRIL 2017 LICENCE NUMBER 54499

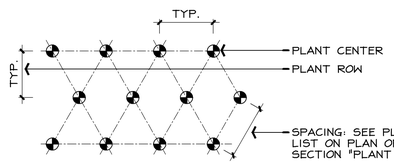

TYPICAL TRIANGULAR SPACING

I | PLANT SPACING - PLAN

1/2" = 1'-0" 0 2'

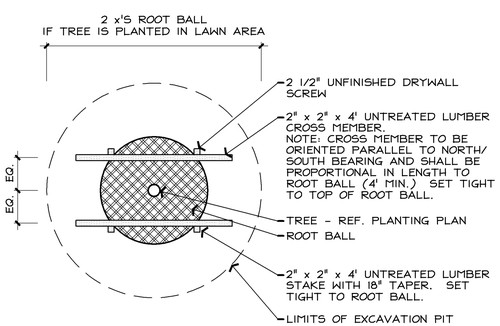

E | TYPICAL TREE STAKING - PLAN

1/2" = 1'-0" 0 2'

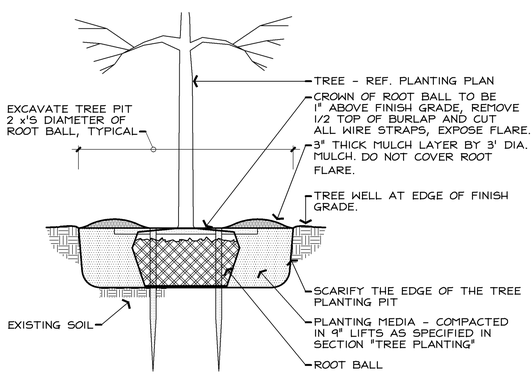

F | TREE PLANTING IN LAWN - SECTION

1/2" = 1'-0" 0 2'

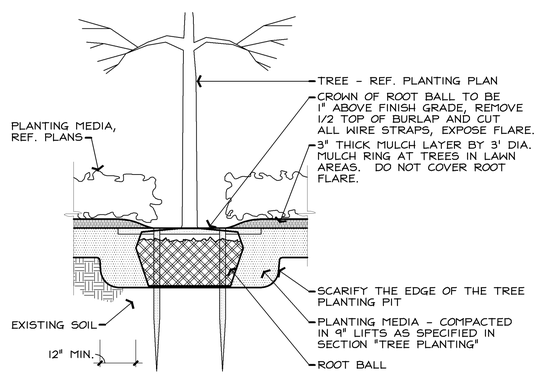

G | TREE PLANTING IN PLANTER - SECTION

1/2" = 1'-0" 0 2'

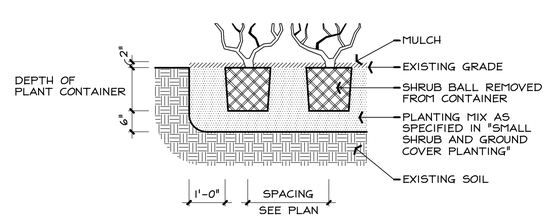

H | SHRUB PLANTING - SECTION

1/2" = 1'-0" 0 2'

PREPARED UNDER THE SEAL OF EDWARD R. YOST.

ISSUED FOR DESIGN REVIEW, NOT FOR PERMITTING, OR CONSTRUCTION

FELCOR LODGING TRUST

EMBASSY SUITES
7901 34TH AVE S, BLOOMINGTON, MN 55425
AIRPORT SOUTH
MINNEAPOLIS, MINNESOTA

● CARRELL
■ PARTNERS
▼ & YOST
architecture

5646 Milton Street
Suite 888
Dallas, Texas 75206
214.953.0042
214.953.0702 FAX
cpy@cpyarch.com
www.cpyarch.com

DRAWN BY: DG
CHECKED BY: MSK
DATE: 04.07.2017
REVISIONS:

PROJECT NO.: 16031
SHEET NO.: L302

PL201700055
PL2017-55

Maintained Foot-Candles

Luminaire Schedule

Project: Embassy Suites - Bloomington, MN

Symbol	Qty	Label	Arrangement	Manufacturer	Description	Arr. Watts	Lum. Watts	Lum. Lumens	LLF	BUG Rating
	4	SA	SINGLE	PHILIPS GARDCO	GL18-4-310LA-961A-NW-IS @ 33'	307.7	307.7	23733	0.810	B2-U1-G4
	3	SB	BACK-BACK	PHILIPS GARDCO	GL18-5-310LA-961A-NW @ 33'	633.4	316.7	29497	0.810	B5-U0-G3
	5	SC	SINGLE	PHILIPS GARDCO	GL18-5-310LA-961A-NW @ 33'	316.7	316.7	29497	0.810	B5-U0-G3
	5	SD	SINGLE	PHILIPS GARDCO	GL18-3-160LA-481A-NW-IS @ 33'	160	160	12316	0.810	B1-U1-G2
	15	WA	WALL MOUNT	PHILIPS STONCO	LPW16-7 @ 10'	36.3	36.3	3372	0.810	B1-U0-G1

Calculation Summary

Label	Avg	Max	Min	Avg/Min	Max/Min	CalcType	Units	Grid Size (Ft.)	Grid Height (Ft.)	# Pts
All points	1.05	7.1	0.0	N.A.	N.A.	Illuminance	Fc	10	0	3727
Property Line	0.35	0.5	0.0	N.A.	N.A.	Illuminance	Fc	8	N.A	285
25' Perimeter Parking Area	1.08	1.80	0.60	1.80	3.00	Illuminance	Fc			283
Interior Parking Area	2.00	4.90	1.00	2.00	4.90	Illuminance	Fc			1184

Interior Parking Area
Average = 2.00
Maximum = 4.90
Minimum = 1.00
Avg/Min Ratio = 2.00
Max/Min Ratio = 4.90
No. Points = 1184

25' Perimeter Parking Area
Average = 1.08
Maximum = 1.80
Minimum = 0.60
Avg/Min Ratio = 1.80
Max/Min Ratio = 3.00
No. Points = 283

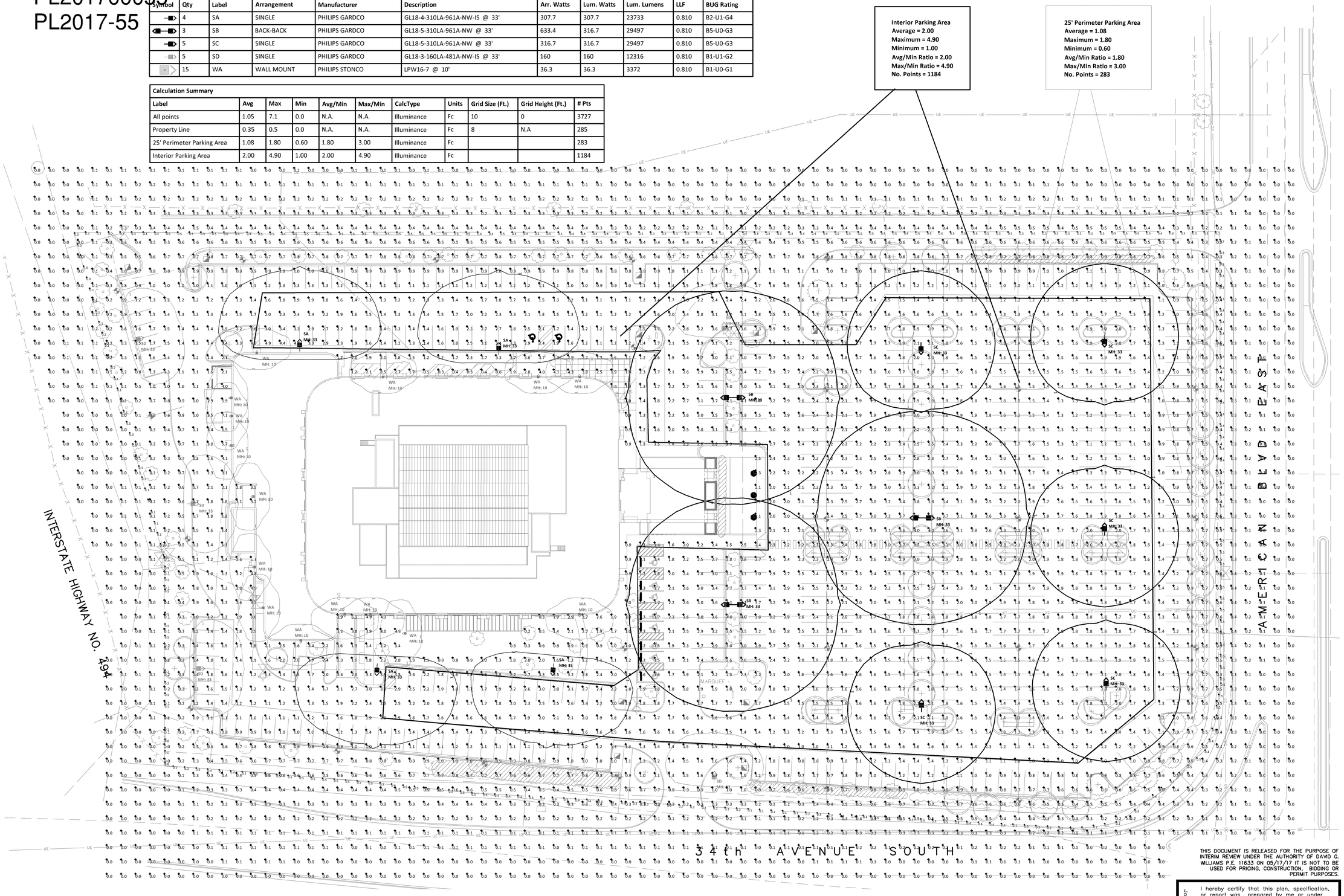

THIS DOCUMENT IS RELEASED FOR THE PURPOSE OF INTERIM REVIEW UNDER THE AUTHORITY OF DAVID G. WILLIAMS P.E. 11633 ON 05/17/17 IT IS NOT TO BE USED FOR PRICING, CONSTRUCTION, BIDDING OR PERMIT PURPOSES.

I hereby certify that this plan, specification, or report was prepared by me or under my direct supervision and that I am a duly Registered Professional Engineer under the laws of the State of Minnesota.

David G. Williams

Date _____ Registration No. 11633

Job # M17005

N

A | LIGHTING PHOTOMETRIC PLAN

1" = 30'-0" 0 15' 30' 60'

PREPARED UNDER THE SEAL OF DAVID G. WILLIAMS

ISSUED FOR DESIGN REVIEW, NOT FOR PERMITTING, OR CONSTRUCTION

\FelCor Logo Grey & Blue.png

CLARK ENGINEERING
12755 Highway 55, Suite 100
Minneapolis, MN 55441-4676
(763) 545-9196
Fax (763) 541-0056
www.clark-eng.com

EMBASSY SUITES
7901 34TH AVE S, BLOOMINGTON, MN 55425
AIRPORT SOUTH
MINNEAPOLIS, MINNESOTA

● CARRELL
■ PARTNERS
▼ & YOST
architecture

5646 Milton Street
Suite 888
Dallas, Texas 75206
214.953.0042
214.953.0702 FAX
cpy@cpyarch.com
www.cpyarch.com

DRAWN BY: KJP
CHECKED BY: DGW
DATE: 05.17.2017
REVISIONS:

PROJECT NO.: M17005
SHEET NO.: MEP102

PL20170005
PL2017-55

Luminaire Schedule										
Project: Embassy Suites - Bloomington, MN										
Symbol	Qty	Label	Arrangement	Manufacturer	Description	Arr. Watts	Lum. Watts	Lum. Lumens	LLF	BUG Rating
	4	SA	SINGLE	PHILIPS GARDCO	GL18-4-310LA-961A-NW-IS @ 33'	307.7	307.7	23733	1.000	B2-U1-G4
	3	SB	BACK-BACK	PHILIPS GARDCO	GL18-5-310LA-961A-NW @ 33'	633.4	316.7	29497	1.000	B5-U0-G3
	5	SC	SINGLE	PHILIPS GARDCO	GL18-5-310LA-961A-NW @ 33'	316.7	316.7	29497	1.000	B5-U0-G3
	5	SD	SINGLE	PHILIPS GARDCO	GL18-3-160LA-481A-NW-IS @ 33'	160	160	12316	1.000	B1-U1-G2
	15	WA	WALL MOUNT	PHILIPS STONCO	LPW16-7 @ 10'	36.3	36.3	3372	1.000	B1-U0-G1

Calculation Summary										
Label	Avg	Max	Min	Avg/Min	Max/Min	CalcType	Units	Grid Size (Ft.)	Grid Height (Ft.)	# Pts
All points	1.30	8.8	0.0	N.A.	N.A.	Illuminance	Fc	10	0	3727
Property Line	0.43	0.7	0.0	N.A.	N.A.	Illuminance	Fc	8	N.A	285
25' Perimeter Parking Area	1.33	2.20	0.70	1.90	3.14	Illuminance	Fc			283
Interior Parking Area	2.46	6.00	1.20	2.05	5.00	Illuminance	Fc			1184

Initial Foot-Candles

Interior Parking Area
Average = 2.46
Maximum = 6.00
Minimum = 1.20
Avg/Min Ratio = 2.05
Max/Min Ratio = 5.00
No. Points = 1184

25' Perimeter Parking Area
Average = 1.33
Maximum = 2.20
Minimum = 0.70
Avg/Min Ratio = 1.90
Max/Min Ratio = 3.14
No. Points = 283

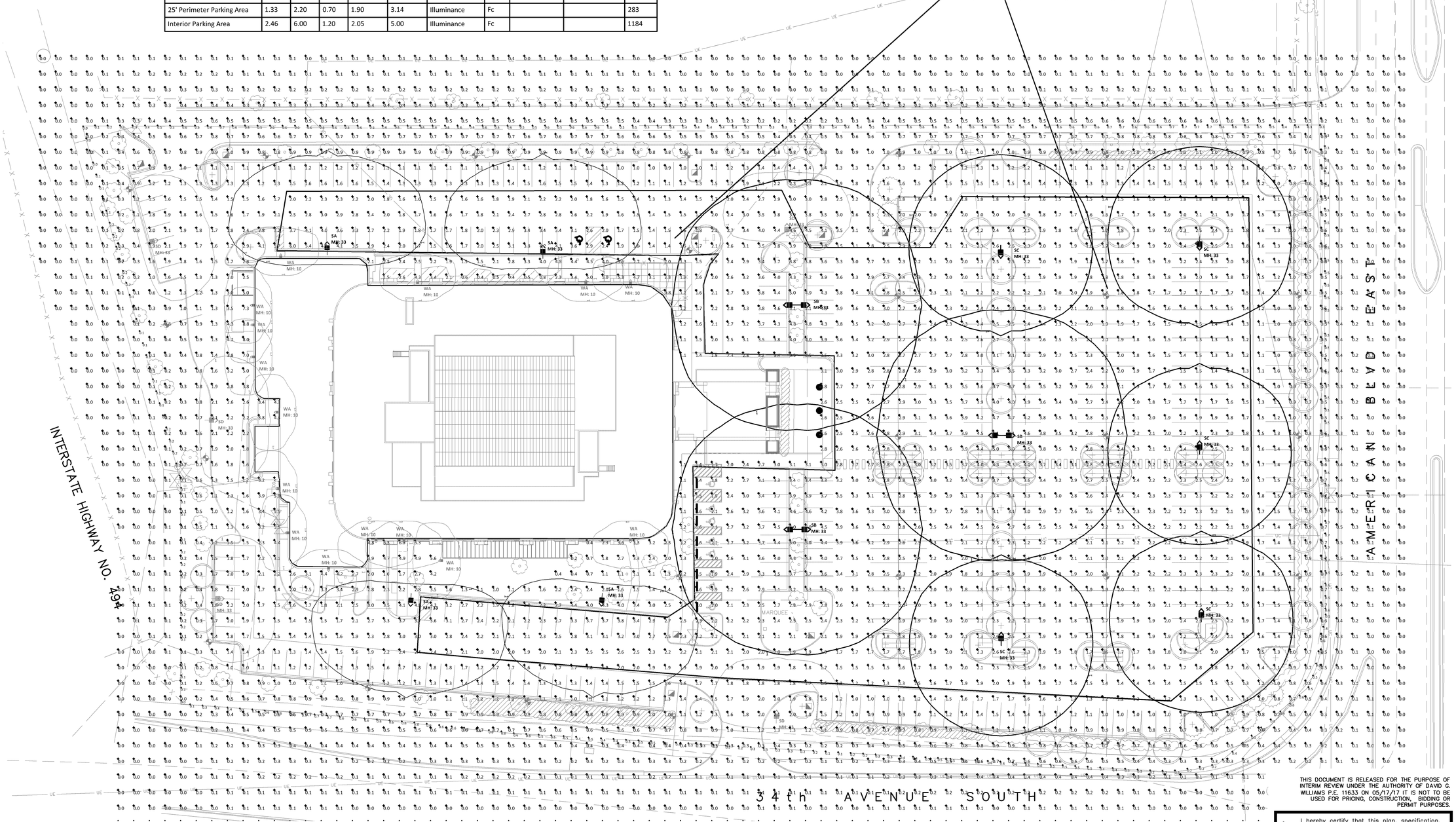

A | LIGHTING PHOTOMETRIC PLAN
1" = 30'-0"
0 15' 30' 60'

THIS DOCUMENT IS RELEASED FOR THE PURPOSE OF INTERIM REVIEW UNDER THE AUTHORITY OF DAVID G. WILLIAMS P.E. 11633 ON 05/17/17 IT IS NOT TO BE USED FOR PRICING, CONSTRUCTION, BIDDING OR PERMIT PURPOSES.

I hereby certify that this plan, specification, or report was prepared by me or under my direct supervision and that I am a duly Registered Professional Engineer under the laws of the State of Minnesota.

David G. Williams
Date _____ Registration No. 11633

Job # M17005

PREPARED UNDER THE SEAL OF DAVID G. WILLIAMS

ISSUED FOR DESIGN REVIEW, NOT FOR PERMITTING, OR CONSTRUCTION

\FelCor Logo Grey & Blue.png

CLARK ENGINEERING
12755 Highway 55, Suite 100
Minneapolis, MN 55441-4676
(763) 545-9196
Fax (763) 541-0056
www.clark-eng.com

EMBASSY SUITES
7901 34TH AVE S, BLOOMINGTON, MN 55425
AIRPORT SOUTH
MINNEAPOLIS, MINNESOTA

CARRELL PARTNERS & YOST architecture
5646 Milton Street
Suite 888
Dallas, Texas 75206
214.953.0042
214.953.0702 FAX
cpy@cpyarch.com
www.cpyarch.com

DRAWN BY:	KJP
CHECKED BY:	DGW
DATE:	05.17.2017
REVISIONS:	
PROJECT NO.:	M17005
SHEET NO.:	MEP103