CASE #PL2020-133

# 8525-8545 Penn Avenue

## BLOOMINGTON, MINNESOTA

## ISSUED FOR: CITY SUBMITTAL

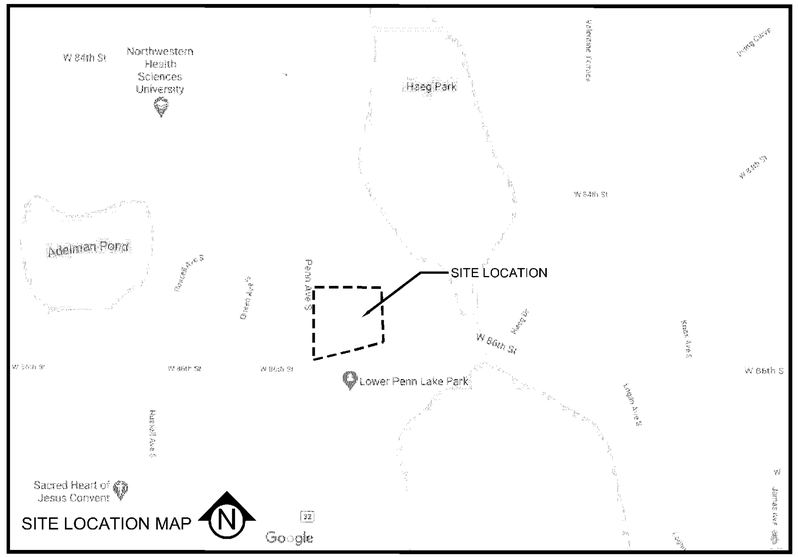


SITE LOCATION MAP

### ARCHITECT:

FIRM GROUND ARCHITECTS & ENGINEERS, INC.
275 MARKET ST #368
MINNEAPOLIS, MN 55405
(612) 819-1835

### DEVELOPER / PROPERTY OWNER:

STEVE FURLONG
PENN LAKE CITYHOMES LLC
8201 NORMAN CENTER DR.
SUITE 450
BLOOMINGTON, MN 55437
952.314.6087

### ENGINEER / LANDSCAPE ARCHITECT:

CIVIL SITE GROUP
4931 W 35TH STREET
SUITE 200
ST LOUIS PARK, MN 55416
612-615-0060

### SURVEYOR:

HARRY S. JOHNSON CO INC.
9063 LYNDALE AVE S #3520
BLOOMINGTON, MN 55420
(952)-884-5341

### MASTER LEGEND:

| | |
|---|---|
| 1125 | EX. 1' CONTOUR ELEVATION INTERVAL |
| 1137.12 | EXISTING SPOT GRADE ELEVATION |
| 1137 | 1.0' CONTOUR ELEVATION INTERVAL |
| 41.26 | SPOT GRADE ELEVATION (GUTTER/FLOW LINE UNLESS OTHERWISE NOTED) |
| 891.00 G | SPOT GRADE ELEVATION TOP OF CURB (GUTTER TOP) |
| 891.00 TC | SPOT GRADE ELEVATION TOP OF WALL |
| 891.00 BS/TS | SPOT GRADE ELEVATION BOTTOM OF WALL |
| | DRAINAGE ARROW |
| EOF=1135.52 | EMERGENCY OVERFLOW |
| | SILT FENCE / BIOROLL - GRADING LIMIT |
| | INLET PROTECTION |
| | STABILIZED CONSTRUCTION ENTRANCE |
| SB-1 | SOIL BORING LOCATION |
| | CURB AND GUTTER (T.O = TIP OUT) |
| | PROPOSED MANHOLE STORM |
| | PROPOSED CATCH BASIN OR CATCH BASIN MANHOLE STORM |
| | PROPOSED GATE VALVE |
| | PROPOSED FIRE HYDRANT |
| | PROPOSED MANHOLE SANITARY |
| | PROPOSED SIGN |
| | PROPOSED LIGHT |
| | PROPOSED SANITARY SEWER |
| | PROPOSED STORM SEWER |
| | PROPOSED WATER MAIN |
| | EXISTING SANITARY SEWER |
| | EXISTING STORM SEWER |
| | EXISTING WATER MAIN |
| | EXISTING GAS MAIN |
| | EXISTING UNDERGROUND ELECTRIC |
| | EXISTING UNDERGROUND CABLE |
| | EXISTING MANHOLE |
| | EXISTING CATCH BASIN |
| | EXISTING HYDRANT |
| | EXISTING STOPBOX |
| | EXISTING GATE VALVE |
| | EXISTING ELECTRIC BOX |
| | EXISTING LIGHT |
| | EXISTING GAS METER |
| | EXISTING GAS VALVE |

811 Know what's **below.** **Call** before you dig.

### SHEET INDEX


| SHEET NUMBER | SHEET TITLE |
|---|---|
| C0.0 | TITLE SHEET |
| V1.0 | SITE SURVEY |
| C1.0 | REMOVALS PLAN |
| C2.0 | SITE PLAN |
| C3.0 | GRADING PLAN |
| C4.0 | UTILITY PLAN |
| C5.0 | CIVIL DETAILS |
| C5.1 | CIVIL DETAILS |
| C5.2 | CIVIL DETAILS |
| C5.3 | CIVIL DETAILS |
| L1.0 | LANDSCAPE PLAN |
| L1.1 | LANDSCAPE PLAN NOTES & DETAILS |
| SW1.0 | SWPPP - EXISTING CONDITIONS |
| SW1.1 | SWPPP - PROPOSED CONDITIONS |
| SW1.2 | SWPPP - DETAILS |
| SW1.3 | SWPPP - NARRATIVE |
| SW1.4 | SWPPP - ATTACHMENTS |
| SW1.5 | SWPPP - ATTACHMENTS |


8/26/2020 3:48:25 PM


CivilSite GROUP
Civil Engineering • Surveying • Landscape Architecture
4931 W. 35th Street, Suite 200
St. Louis Park, MN 55416
civilsitegroup.com 612-615-0060


PROJECT
**8525-8545 Penn Avenue**
Bloomington, Minnesota

**Penn Lake CityHomes LLC**
Bloomington, Minnesota

I HEREBY CERTIFY THAT THIS PLAN, SPECIFICATION, OR REPORT WAS PREPARED BY ME OR UNDER MY DIRECT SUPERVISION AND THAT I AM A DULY LICENSED PROFESSIONAL ENGINEER UNDER THE LAWS OF THE STATE OF MINNESOTA.

Matthew R. Pavek
DATE 08.05.20 LICENSE NO. 44263

ISSUE/SUBMITTAL SUMMARY

| DATE | DESCRIPTION |
|---|---|
| 06.17.20 | CITY SUBMITTAL |
| 06.05.20 | CITY SUBMITTAL |
| 08.26.20 | CITY RE-SUBMITTAL |

DRAWN BY: kit REVIEWED BY: kit
PROJECT NUMBER: 19239

REVISION SUMMARY

| DATE | DESCRIPTION |
|---|---|

TITLE SHEET

C0.0

© COPYRIGHT CIVIL SITE GROUP INC.

CASE #PL2020-133

# PRELIMINARY PLAT OF: PENN CORNER ADDITION

## GENERAL NOTES:

1. The bearing system used is assumed.

2. The location of the underground utilities shown hereon, if any, are approximate only. PURSUANT TO MSA 216D CONTACT GOPHER STATE ONE CALL AT (612) 454-0002 PRIOR TO ANY EXCAVATION.

3. Subject property is identified as being in "Zone X, Other Areas" on Flood Insurance Rate Map No. 27053C0456F, effective date November 4, 2016.

4. Zoning = Presently R-1 (Single-Family Residential) per City of Bloomington.

5. Setback requirements per City of Bloomington.
Adjoining street = 30 feet
Rear = 30 feet
Side = 10 feet

The zoning and setback information shown on this survey are per Bloomington's webpage, on July 21, 2020. No representation is made for the accuracy or completeness of said third party information. This firm is not an expert in the interpretation of complex zoning ordinances, compliance is beyond the scope of this survey. Any user of said information is urged to contact the local agency directly.

6. Site Area = 102,902 square feet = 2.362 acres, including road right of way.
= 81,887 square feet = 1.880 acres, excluding road right of way.

7. There are a total of 0 striped parking stalls on said property, of which there are 0 designated as handicap and 0 located in garages.

8. This survey was made on the ground.

9. No current title work was furnished for the preparation of this survey. Legal description, recorded or unrecorded easements and encumbrances are subject to revision upon receipt of current title work.

10. Elevation datum is based on NAVD 88 data.
HSJBenchmark #1 is located Top of Nail (AS SHOWN ON SURVEY)
Elevation = 824.81

11. Existing Impervious Area details.
Total Site Area: 81,887 s.f.
Total Impervious Area: 3,579 s.f.
House Area: 1,619 s.f.
Driveway/Paved Areas: 1,525+369= 1,897 s.f.
Other Area: 66 s.f.
Percent of Impervious Area: 4.37%

## LEGEND

- Property Corner
- Found Hennepin Co. Monument
- Concrete
- Concrete Curb
- Fence
- Overhead Electric
- Underground Electric
- Underground Telephone
- Water
- Gas
- Sanitary Sewer
- Storm Sewer
- Building Setback Line
- Electric Box
- Electric Manhole
- Power Pole
- Hydrant
- Unknown Manhole
- Gate Valve
- Catchbasin
- Catchbasin
- Air Conditioning Unit
- Deciduous Tree (Dia. in in.)
- Coniferous Tree (Dia. in in.)
- Sanitary Manhole
- 906 Existing Contour
- X 851.27G Existing Spot Elevation Gutter
- X 934.3 Existing Spot Elevation

1" = 40'-0"
20'-0" 0 40'-0"

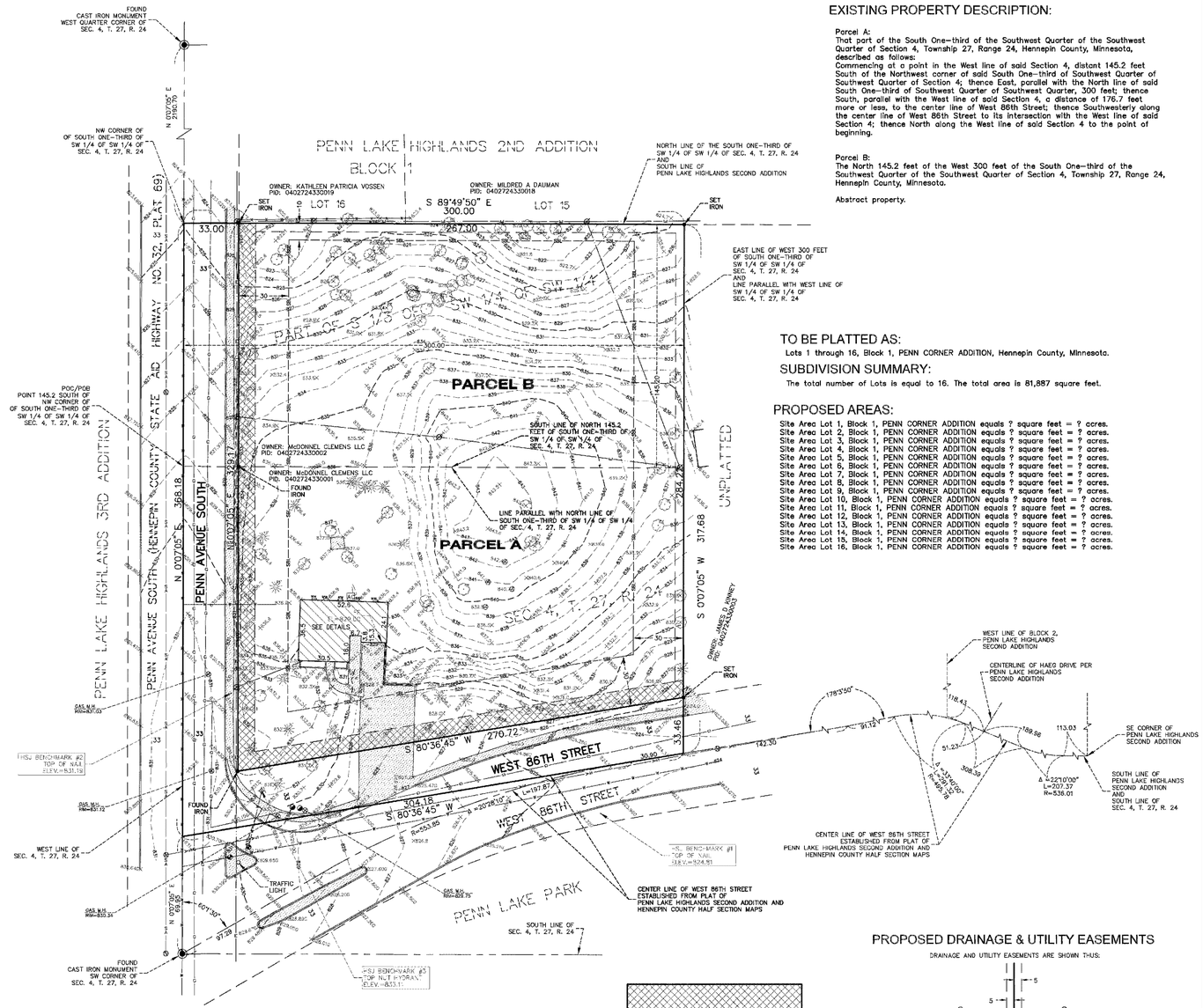


## EXISTING PROPERTY DESCRIPTION:

Parcel A:
That part of the South One-third of the Southwest Quarter of the Southwest Quarter of Section 4, Township 27, Range 24, Hennepin County, Minnesota, described as follows:
Commencing at a point in the West line of said Section 4, distant 145.2 feet South of the Northwest corner of said South One-third of Southwest Quarter of Southwest Quarter of Section 4; thence East, parallel with the North line of said South One-third of Southwest Quarter of Southwest Quarter, 300 feet; thence South, parallel with the West line of said Section 4, a distance of 176.7 feet more or less, to the center line of West 86th Street; thence Southwesterly along the center line of West 86th Street to its intersection with the West line of said Section 4; thence North along the West line of said Section 4 to the point of beginning.

Parcel B:
The North 145.2 feet of the West 300 feet of the South One-third of the Southwest Quarter of the Southwest Quarter of Section 4, Township 27, Range 24, Hennepin County, Minnesota.

Abstract property.

## TO BE PLATTED AS:

Lots 1 through 16, Block 1, PENN CORNER ADDITION, Hennepin County, Minnesota.

## SUBDIVISION SUMMARY:

The total number of Lots is equal to 16. The total area is 81,887 square feet.

## PROPOSED AREAS:

Site Area Lot 1, Block 1, PENN CORNER ADDITION equals ? square feet = ? acres.
Site Area Lot 2, Block 1, PENN CORNER ADDITION equals ? square feet = ? acres.
Site Area Lot 3, Block 1, PENN CORNER ADDITION equals ? square feet = ? acres.
Site Area Lot 4, Block 1, PENN CORNER ADDITION equals ? square feet = ? acres.
Site Area Lot 5, Block 1, PENN CORNER ADDITION equals ? square feet = ? acres.
Site Area Lot 6, Block 1, PENN CORNER ADDITION equals ? square feet = ? acres.
Site Area Lot 7, Block 1, PENN CORNER ADDITION equals ? square feet = ? acres.
Site Area Lot 8, Block 1, PENN CORNER ADDITION equals ? square feet = ? acres.
Site Area Lot 9, Block 1, PENN CORNER ADDITION equals ? square feet = ? acres.
Site Area Lot 10, Block 1, PENN CORNER ADDITION equals ? square feet = ? acres.
Site Area Lot 11, Block 1, PENN CORNER ADDITION equals ? square feet = ? acres.
Site Area Lot 12, Block 1, PENN CORNER ADDITION equals ? square feet = ? acres.
Site Area Lot 13, Block 1, PENN CORNER ADDITION equals ? square feet = ? acres.
Site Area Lot 14, Block 1, PENN CORNER ADDITION equals ? square feet = ? acres.
Site Area Lot 15, Block 1, PENN CORNER ADDITION equals ? square feet = ? acres.
Site Area Lot 16, Block 1, PENN CORNER ADDITION equals ? square feet = ? acres.

**SITE ADDRESS**
8525 and 8545 Penn Avenue South
Bloomington, Minnesota 55431

**OWNER**
Bloomington Redevelopment
**CONTACT**
Steve Furlong (952) 314-6087
8201 Normandale Center Drive
Bloomington, Minnesota 55437

**SURVEYOR**
Harry S. Johnson Co., Inc.
**CONTACT**
Tom Hodorff (952) 884-5341
9063 Lyndale Avenue South.
Bloomington, Minnesota 55420

**HOUSE DETAILS:**
8545 PENN AVENUE SOUTH
1-STORY HOUSE
FOOTPRINT AREA = 1,619 SQ. FT.

**PROPOSED 10 FOOT SIDEWALK & BIKEWAY EASEMENT**

## PROPOSED DRAINAGE & UTILITY EASEMENTS

DRAINAGE AND UTILITY EASEMENTS ARE SHOWN THUS:

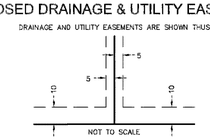


BEING 5 FEET IN WIDTH, ADJOINING LOT LINES, AND 10 FEET IN WIDTH, ADJOINING RIGHT OF WAY LINES, UNLESS OTHERWISE INDICATED.

CAD File: 2019348.DWG
Path: J:\2019348\DWG\

N

**SCALE: 1 INCH = 30 FEET**

**REVISIONS**
Date:

I hereby certify that this survey, plan or report was prepared by me or under my direct supervision and that I am a duly Registered Land Surveyor under the laws of the State of Minnesota

Thomas E. Hodorff, L.S.
Minnesota Reg. No. 23677

Date: July 14, 2020

**PRELIMINARY PLAT OF GOPHER PLAT**

**For:**

McDONNEL CLEMENS LLC

**SITE:**
*8525-8545 PENN AVENUE SOUTH*

BLOOMINGTON, MINNESOTA

**HENNEPIN COUNTY**

HARRY S. JOHNSON CO., INC.
LAND SURVEYORS
9063 Lyndale Avenue South
Bloomington, MN. 55437
Tele. 952-884-5341 Fax 952-884-5344
www.hsjsurveyors.com

| | |
|---|---|
| Book 662 | File No. 1-3-10288PP |
| Page 19 | W.O. Number 2019348 |
| CAD Technician CT | |
| Sheet No. | 1 OF 1 |

SITE_SURVEY

V1.0

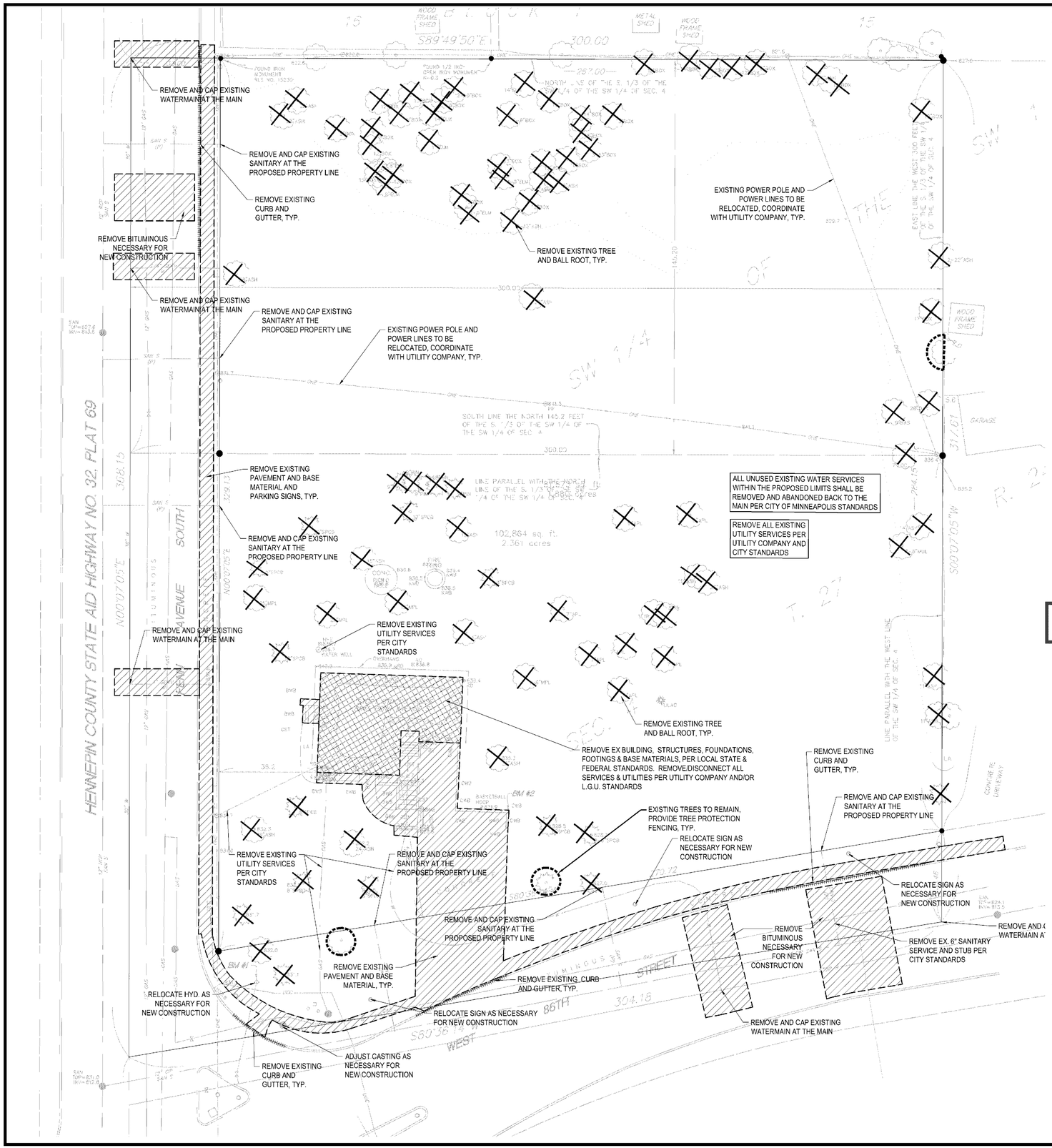


## REMOVAL NOTES:

1. SEE STORM WATER POLLUTION PREVENTION PLAN (SWPPP) PLAN FOR CONSTRUCTION STORM WATER MANAGEMENT PLAN.
2. REMOVAL OF MATERIALS NOTED ON THE DRAWINGS SHALL BE IN ACCORDANCE WITH MNDOT, STATE AND LOCAL REGULATIONS.
3. REMOVAL OF PRIVATE UTILITIES SHALL BE COORDINATED WITH UTILITY OWNER PRIOR TO CONSTRUCTION ACTIVITIES.
4. EXISTING PAVEMENTS SHALL BE SAWCUT IN LOCATIONS AS SHOWN ON THE DRAWINGS OR THE NEAREST JOINT FOR PROPOSED PAVEMENT CONNECTIONS.
5. ALL SAWCUTS SHALL NOT BE WITHIN THE VEHICLE WHEEL PATHS.
6. REMOVED MATERIALS SHALL BE DISPOSED OF TO A LEGAL OFF-SITE LOCATION AND IN ACCORDANCE WITH STATE AND LOCAL REGULATIONS.
7. ABANDON, REMOVAL, CONNECTION, AND PROTECTION NOTES SHOWN ON THE DRAWINGS ARE APPROXIMATE. COORDINATE WITH PROPOSED PLANS.
8. EXISTING ON-SITE FEATURES NOT NOTED FOR REMOVAL SHALL BE PROTECTED THROUGHOUT THE DURATION OF THE CONTRACT.
9. PROPERTY LINES SHALL BE CONSIDERED GENERAL CONSTRUCTION LIMITS UNLESS OTHERWISE NOTED ON THE DRAWINGS. WORK WITHIN THE GENERAL CONSTRUCTION LIMITS SHALL INCLUDE STAGING, DEMOLITION AND CLEAN-UP OPERATIONS AS WELL AS CONSTRUCTION SHOWN ON THE DRAWINGS.
10. MINOR WORK OUTSIDE OF THE GENERAL CONSTRUCTION LIMITS SHALL BE ALLOWED AS SHOWN ON THE PLAN AND PER CITY REQUIREMENTS.
11. DAMAGE BEYOND THE PROPERTY LIMITS CAUSED BY CONSTRUCTION ACTIVITY SHALL BE REPAIRED IN A MANNER APPROVED BY THE ENGINEER/LANDSCAPE ARCHITECT OR IN ACCORDANCE WITH THE CITY.
12. PROPOSED WORK (BUILDING AND CIVIL) SHALL NOT DISTURB EXISTING UTILITIES UNLESS OTHERWISE SHOWN ON THE DRAWINGS AND APPROVED BY THE CITY PRIOR TO CONSTRUCTION.
13. SITE SECURITY MAY BE NECESSARY AND PROVIDED IN A MANNER TO PROHIBIT VANDALISM, AND THEFT, DURING AND AFTER NORMAL WORK HOURS, THROUGHOUT THE DURATION OF THE CONTRACT. SECURITY MATERIALS SHALL BE IN ACCORDANCE WITH THE CITY.
14. VEHICULAR ACCESS TO THE SITE SHALL BE MAINTAINED FOR DELIVERY AND INSPECTION ACCESS DURING NORMAL OPERATING HOURS. AT NO POINT THROUGHOUT THE DURATION OF THE CONTRACT SHALL CIRCULATION OF ADJACENT STREETS BE BLOCKED WITHOUT APPROVAL BY THE CITY PRIOR TO CONSTRUCTION ACTIVITIES.
15. ALL TRAFFIC CONTROLS SHALL BE PROVIDED AND ESTABLISHED PER THE REQUIREMENTS OF THE MINNESOTA MANUAL ON UNIFORM TRAFFIC CONTROL DEVICES (MMUTCD) AND THE CITY. THIS SHALL INCLUDE, BUT NOT BE LIMITED TO, SIGNAGE, BARRICADES, FLASHERS, AND FLAGGERS AS NEEDED. ALL PUBLIC STREETS SHALL REMAIN OPEN TO TRAFFIC AT ALL TIMES. NO ROAD CLOSURES SHALL BE PERMITTED WITHOUT APPROVAL BY THE CITY.
16. SHORING FOR BUILDING EXCAVATION MAY BE USED AT THE DISCRETION OF THE CONTRACTOR AND AS APPROVED BY THE OWNERS REPRESENTATIVE AND THE CITY PRIOR TO CONSTRUCTION ACTIVITIES.
17. STAGING, DEMOLITION, AND CLEAN-UP AREAS SHALL BE WITHIN THE PROPERTY LIMITS AS SHOWN ON THE DRAWINGS AND MAINTAINED IN A MANNER AS

## CITY OF BLOOMINGTON REMOVAL NOTES:

1. ALL CONSTRUCTION AND POST-CONSTRUCTION PARKING AND STORAGE OF EQUIPMENT AND MATERIALS MUST BE ON-SITE. USE OF PUBLIC STREETS FOR PRIVATE CONSTRUCTION PARKING, LOADING/UNLOADING, AND STORAGE WILL NOT BE ALLOWED.
2. REMOVE EXISTING WATERMAIN SERVICE IN ACCORDANCE WITH CITY REQUIREMENTS.
3. CONTRACTOR SHALL OBTAIN A PUBLIC WORKS PERMIT FOR OBSTRUCTIONS AND CONCRETE WORK WITHIN THE RIGHT-OF-WAY. PERMIT IS REQUIRED PRIOR TO REMOVALS OR INSTALLATION. CONTACT PAUL JARVIS (952-563-4548, pjarvis@BloomingtonMN.gov) FOR PERMIT INFORMATION.

## EROSION CONTROL NOTES:

SEE SWPPP ON SHEETS SW1.0-SW1.5

**CASE #PL2020-133**

## REMOVALS LEGEND:

- 1125 — EX. 1' CONTOUR ELEVATION INTERVAL
- REMOVAL OF PAVEMENT AND ALL BASE MATERIAL, INCLUDING BIT., CONC., AND GRAVEL PVMTS.
- REMOVAL OF STRUCTURE INCLUDING ALL FOOTINGS AND FOUNDATIONS.
- REMOVE CURB AND GUTTER. IF IN RIGHT-OF-WAY, COORDINATE WITH LOCAL GOVERNING UNIT.
- TREE PROTECTION
- TREE REMOVAL - INCLUDING ROOTS AND STUMPS

Know what's **below.** **Call** before you dig.

1" = 20'-0"
10'-0" 0 20'-0"

8/26/2020 3:48:41 PM

CivilSite GROUP
REQUIRED BY THE CITY.
Civil Engineering • Surveying • Landscape Architecture
4931 W. 35th Street, Suite 200
St. Louis Park, MN 55416
civilsitegroup.com 612-615-0060

PROJECT
# 8525-8545 Penn Avenue
Bloomington, Minnesota

**Penn Lake CityHomes LLC**
Bloomington, Minnesota

I HEREBY CERTIFY THAT THIS PLAN, SPECIFICATION, OR REPORT WAS PREPARED BY ME OR UNDER MY DIRECT SUPERVISION AND THAT I AM A DULY LICENSED PROFESSIONAL ENGINEER UNDER THE LAWS OF THE STATE OF MINNESOTA.

Matthew R. Pavek
DATE 08.05.20 LICENSE NO. 44263

### ISSUE/SUBMITTAL SUMMARY

| DATE | DESCRIPTION |
|---|---|
| 06.17.20 | CITY SUBMITTAL |
| 06.05.20 | CITY SUBMITTAL |
| 08.26.20 | CITY RE-SUBMITTAL |

DRAWN BY: kit REVIEWED BY: kit
PROJECT NUMBER: 19239

### REVISION SUMMARY

| DATE | DESCRIPTION |
|---|---|

## REMOVALS PLAN

# C1.0

© COPYRIGHT CIVIL SITE GROUP INC.

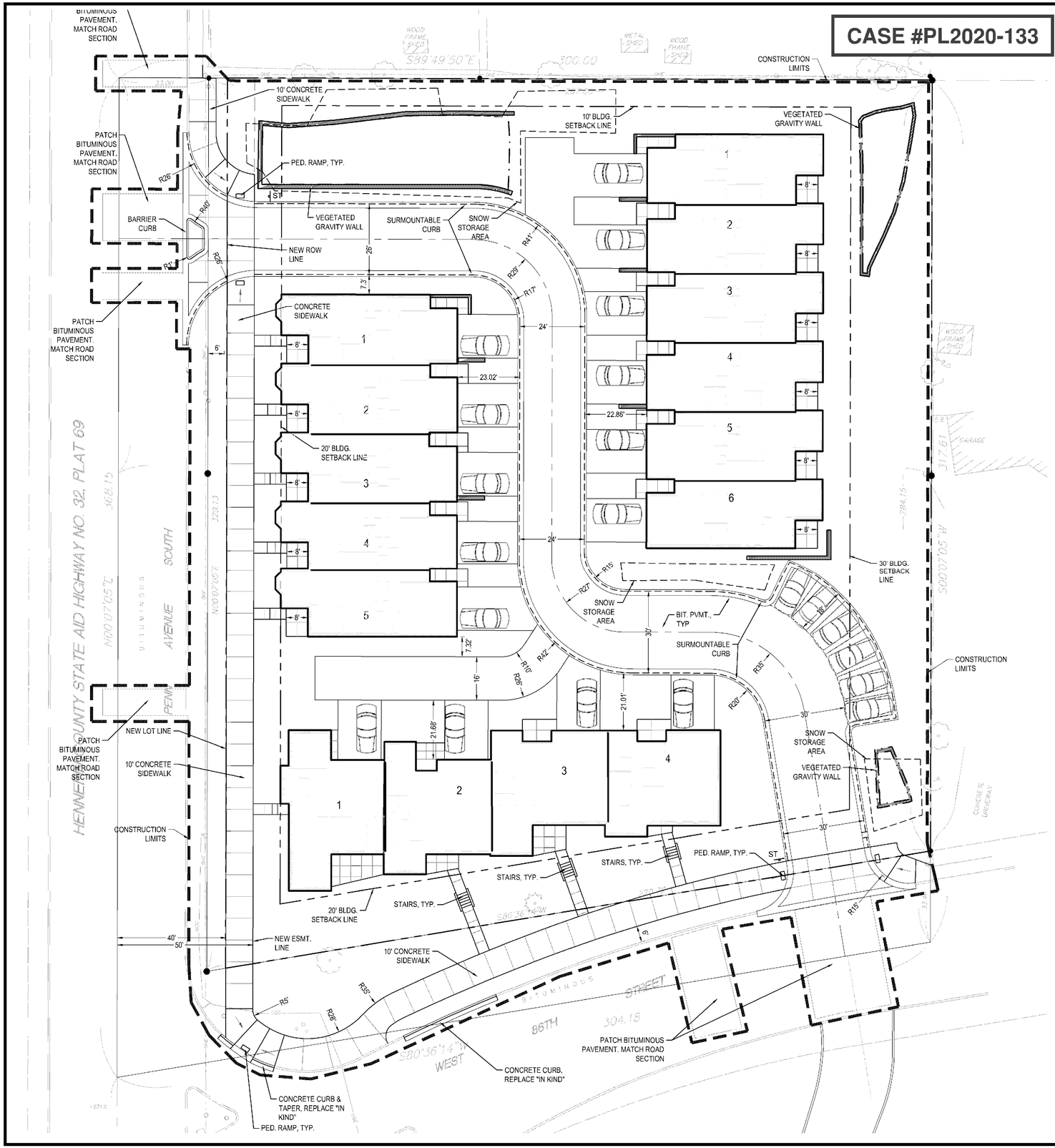


## CITY OF BLOOMINGTON SITE SPECIFIC NOTES:

1. ALL CONSTRUCTION AND POST-CONSTRUCTION PARKING AND STORAGE OF EQUIPMENT AND MATERIALS MUST BE ON-SITE. USE OF PUBLIC STREETS FOR PRIVATE CONSTRUCTION PARKING, LOADING/UNLOADING, AND STORAGE WILL NOT BE ALLOWED.

## SITE LAYOUT NOTES:

1. CONTRACTOR SHALL VERIFY LOCATIONS AND LAYOUT OF ALL SITE ELEMENTS PRIOR TO BEGINNING CONSTRUCTION, INCLUDING BUT NOT LIMITED TO, LOCATIONS OF EXISTING AND PROPOSED PROPERTY LINES, EASEMENTS, SETBACKS, UTILITIES, BUILDINGS AND PAVEMENTS. CONTRACTOR IS RESPONSIBLE FOR FINAL LOCATIONS OF ALL ELEMENTS FOR THE SITE. ANY REVISIONS REQUIRED AFTER COMMENCEMENT OF CONSTRUCTION, DUE TO LOCATIONAL ADJUSTMENTS SHALL BE CORRECTED AT NO ADDITIONAL COST TO OWNER. ADJUSTMENTS TO THE LAYOUT SHALL BE APPROVED BY THE ENGINEER/LANDSCAPE ARCHITECT PRIOR TO INSTALLATION OF MATERIALS. STAKE LAYOUT FOR APPROVAL.
2. THE CONTRACTOR SHALL OBTAIN ALL NECESSARY PERMITS PRIOR TO CONSTRUCTION, INCLUDING A RIGHT-OF-WAY AND STREET OPENING PERMIT.
3. THE CONTRACTOR SHALL VERIFY RECOMMENDATIONS NOTED IN THE GEO TECHNICAL REPORT PRIOR TO INSTALLATION OF SITE IMPROVEMENT MATERIALS.
4. CONTRACTOR SHALL FIELD VERIFY COORDINATES AND LOCATION DIMENSIONS OF THE BUILDING AND STAKE FOR REVIEW AND APPROVAL BY THE OWNERS REPRESENTATIVE PRIOR TO INSTALLATION OF FOOTING MATERIALS.
5. LOCATIONS OF STRUCTURES, ROADWAY PAVEMENTS, CURBS AND GUTTERS, BOLLARDS, AND WALKS ARE APPROXIMATE AND SHALL BE STAKED IN THE FIELD, PRIOR TO INSTALLATION, FOR REVIEW AND APPROVAL BY THE ENGINEER/LANDSCAPE ARCHITECT.
6. CURB DIMENSIONS SHOWN ARE TO FACE OF CURB. BUILDING DIMENSIONS ARE TO FACE OF CONCRETE FOUNDATION. LOCATION OF BUILDING IS TO BUILDING FOUNDATION AND SHALL BE AS SHOWN ON THE DRAWINGS.
7. THE CONTRACTOR SHALL SUBMIT SHOP DRAWINGS OR SAMPLES AS SPECIFIED FOR REVIEW AND APPROVAL BY THE ENGINEER/LANDSCAPE ARCHITECT PRIOR TO FABRICATION FOR ALL PREFABRICATED SITE IMPROVEMENT MATERIALS SUCH AS, BUT NOT LIMITED TO THE FOLLOWING, FURNISHINGS, PAVEMENTS, WALLS, RAILINGS, BENCHES, FLAGPOLES, LANDING PADS FOR CURB RAMPS, AND LIGHT AND POLES. THE OWNER RESERVES THE RIGHT TO REJECT INSTALLED MATERIALS NOT PREVIOUSLY APPROVED.
8. PEDESTRIAN CURB RAMPS SHALL BE CONSTRUCTED WITH TRUNCATED DOME LANDING AREAS IN ACCORDANCE WITH A.D.A. REQUIREMENTS-SEE DETAIL.
9. CROSSWALK STRIPING SHALL BE 24" WIDE WHITE PAINTED LINE, SPACED 48" ON CENTER PERPENDICULAR TO THE FLOW OF TRAFFIC. WIDTH OF CROSSWALK SHALL BE 5' WIDE. ALL OTHER PAVEMENT MARKINGS SHALL BE WHITE IN COLOR UNLESS OTHERWISE NOTED OR REQUIRED BY ADA OR LOCAL GOVERNING BODIES.
10. SEE SITE PLAN FOR CURB AND GUTTER TYPE. TAPER BETWEEN CURB TYPES-SEE DETAIL.
11. ALL CURB RADII ARE MINIMUM 3' UNLESS OTHERWISE NOTED.
12. CONTRACTOR SHALL REFER TO FINAL PLAT FOR LOT BOUNDARIES, NUMBERS, AREAS AND DIMENSIONS PRIOR TO SITE IMPROVEMENTS.
13. FIELD VERIFY ALL EXISTING SITE CONDITIONS, DIMENSIONS.
14. PARKING IS TO BE SET PARALLEL OR PERPENDICULAR TO EXISTING BUILDING UNLESS NOTED OTHERWISE.
15. ALL PARKING LOT PAINT STRIPPING TO BE WHITE, 4" WIDE TYP.
16. BITUMINOUS PAVING TO BE "LIGHT DUTY" UNLESS OTHERWISE NOTED. SEE DETAIL SHEETS FOR PAVEMENT SECTIONS.
17. ALL TREES THAT ARE TO REMAIN ARE TO BE PROTECTED FROM DAMAGE WITH A CONSTRUCTION FENCE AT THE DRIP LINE. SEE LANDSCAPE DOCUMENTS.

## SITE PLAN LEGEND:

- LIGHT DUTY BITUMINOUS PAVEMENT. SEE GEOTECHNICAL REPORT FOR AGGREGATE BASE & WEAR COURSE DEPTH, SEE DEATIL.
- HEAVY DUTY BITUMINOUS PAVEMENT. SEE GEOTECHNICAL REPORT FOR AGGREGATE BASE & WEAR COURSE DEPTH, SEE DETAIL.
- CONCRETE PAVEMENT AS SPECIFIED (PAD OR WALK) SEE GEOTECHNICAL REPORT FOR AGGREGATE BASE & CONCRETE DEPTHS, SEE DETAIL.
- PROPERTY LINE
- CONSTRUCTION LIMITS
- CURB AND GUTTER-SEE NOTES (T.O.) TIP OUT GUTTER WHERE APPLICABLE-SEE PLAN
- SIGN AND POST ASSEMBLY. SHOP DRAWINGS REQUIRED.
  HC = ACCESSIBLE SIGN
  NP = NO PARKING FIRE LANE
  ST = STOP
  CP = COMPACT CAR PARKING ONLY

## SITE AREA TABLE:

SITE AREA CALCULATIONS

| | EXISTING CONDITION | | PROPOSED CONDITION | |
|---|---|---|---|---|
| BUILDING COVERAGE | 1,624 SF | 2.0% | 22,744 SF | 28.6% |
| ALL PAVEMENTS | 2,033 SF | 2.6% | 26,714 SF | 33.6% |
| ALL NON-PAVEMENTS | 75,916 SF | 95.4% | 30,115 SF | 37.8% |
| TOTAL SITE AREA | 79,573 SF | 100.0% | 79,573 SF | 100.0% |

IMPERVIOUS SURFACE

| | | | |
|---|---|---|---|
| EXISTING CONDITION | 3,657 SF | 4.6% | 0.08 |
| PROPOSED CONDITION | 49,458 SF | 62.2% | 1.14 |
| DIFFERENCE (EX. VS PROP.) | 45,801 SF | 57.6% | 1.05 |

Know what's **below.** **Call** before you dig.

1" = 20'-0"
10'-0" 0 20'-0"

8/26/2020 3:48:51 PM

CivilSite GROUP
Civil Engineering • Surveying • Landscape Architecture
4931 W. 35th Street, Suite 200
St. Louis Park, MN 55416
civilsitegroup.com 612-615-0060

PROJECT
# 8525-8545 Penn Avenue
Bloomington, Minnesota

Penn Lake CityHomes LLC
Bloomington, Minnesota

I HEREBY CERTIFY THAT THIS PLAN, SPECIFICATION, OR REPORT WAS PREPARED BY ME OR UNDER MY DIRECT SUPERVISION AND THAT I AM A DULY LICENSED PROFESSIONAL ENGINEER UNDER THE LAWS OF THE STATE OF MINNESOTA.

Matthew R. Pavek
DATE 08.05.20 LICENSE NO. 44263

ISSUE/SUBMITTAL SUMMARY

| DATE | DESCRIPTION |
|---|---|
| 06.17.20 | CITY SUBMITTAL |
| 06.08.20 | CITY SUBMITTAL |
| 06.26.20 | CITY RESUBMITTAL |

DRAWN BY: kit REVIEWED BY: kit
PROJECT NUMBER: 19239

REVISION SUMMARY

| DATE | DESCRIPTION |
|---|---|

SITE PLAN

C2.0

© COPYRIGHT CIVIL SITE GROUP INC.

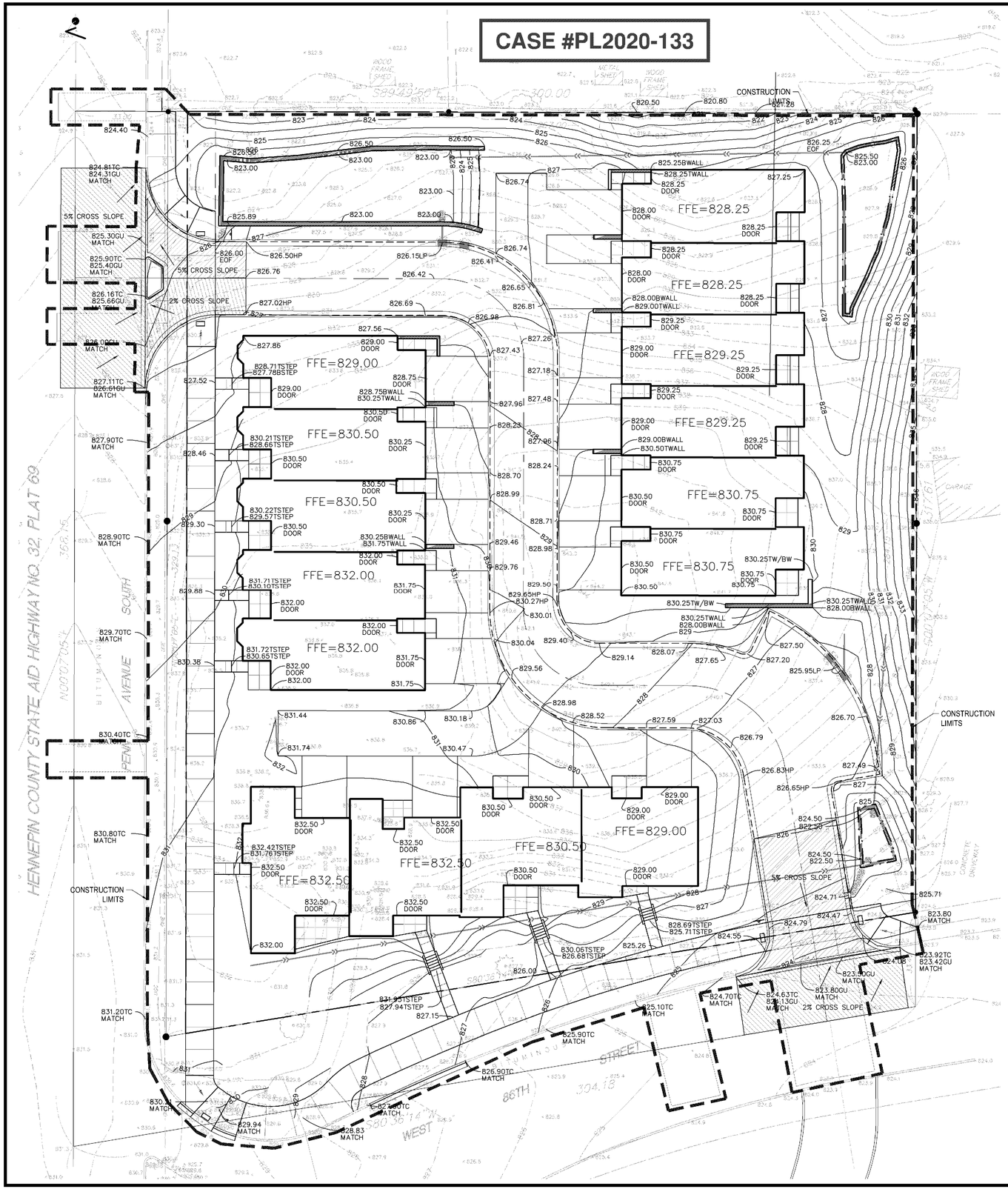


# GENERAL GRADING NOTES:

1. SEE SITE PLAN FOR HORIZONTAL LAYOUT & GENERAL GRADING NOTES.
2. THE CONTRACTOR SHALL COMPLETE THE SITE GRADING CONSTRUCTION (INCLUDING BUT NOT LIMITED TO SITE PREPARATION, SOIL CORRECTION, EXCAVATION, EMBANKMENT, ETC.) IN ACCORDANCE WITH THE REQUIREMENTS OF THE OWNER'S SOILS ENGINEER. ALL SOIL TESTING SHALL BE COMPLETED BY THE OWNER'S SOILS ENGINEER. THE CONTRACTOR SHALL BE RESPONSIBLE FOR COORDINATING ALL REQUIRED SOIL TESTS AND INSPECTIONS WITH THE SOILS ENGINEER.
3. GRADING AND EXCAVATION ACTIVITIES SHALL BE PERFORMED IN ACCORDANCE WITH THE NATIONAL POLLUTION DISCHARGE ELIMINATION SYSTEM (NPDES) PERMIT REQUIREMENTS & PERMIT REQUIREMENTS OF THE CITY.
4. PROPOSED SPOT GRADES ARE FLOW-LINE FINISHED GRADE ELEVATIONS, UNLESS OTHERWISE NOTED.
5. GRADES OF WALKS SHALL BE INSTALLED WITH 5% MAX. LONGITUDINAL SLOPE AND 1% MIN. AND 2% MAX. CROSS SLOPE, UNLESS OTHERWISE NOTED.
6. PROPOSED SLOPES SHALL NOT EXCEED 3:1 UNLESS INDICATED OTHERWISE ON THE DRAWINGS. MAXIMUM SLOPES IN MAINTAINED AREAS IS 4:1
7. PROPOSED RETAINING WALLS, FREESTANDING WALLS, OR COMBINATION OF WALL TYPES GREATER THAN 4' IN HEIGHT SHALL BE DESIGNED AND ENGINEERED BY A REGISTERED RETAINING WALL ENGINEER. DESIGN DRAWINGS SHALL BE SUBMITTED FOR REVIEW AND APPROVAL PRIOR TO CONSTRUCTION.
8. THE CONTRACTOR SHALL BE RESPONSIBLE FOR MAINTENANCE OF GRADE STAKES THROUGHOUT THE DURATION OF CONSTRUCTION TO ESTABLISH PROPER GRADES. THE CONTRACTOR SHALL ALSO BE RESPONSIBLE FOR A FINAL FIELD CHECK OF FINISHED GRADES ACCEPTABLE TO THE ENGINEER/LANDSCAPE ARCHITECT PRIOR TO TOPSOIL AND SODDING ACTIVITIES.
9. IF EXCESS OR SHORTAGE OF SOIL MATERIAL EXISTS, THE CONTRACTOR SHALL TRANSPORT ALL EXCESS SOIL MATERIAL OFF THE SITE TO AN AREA SELECTED BY THE CONTRACTOR, OR IMPORT SUITABLE MATERIAL TO THE SITE.
10. EXCAVATE TOPSOIL FROM AREAS TO BE FURTHER EXCAVATED OR REGRADED AND STOCKPILE IN AREAS DESIGNATED ON THE SITE. THE CONTRACTOR SHALL SALVAGE ENOUGH TOPSOIL FOR RESPREADING ON THE SITE AS SPECIFIED. EXCESS TOPSOIL SHALL BE PLACED IN EMBANKMENT AREAS, OUTSIDE OF BUILDING PADS, ROADWAYS AND PARKING AREAS. THE CONTRACTOR SHALL SUBCUT CUT AREAS, WHERE TURF IS TO BE ESTABLISHED, TO A DEPTH OF 6 INCHES. RESPREAD TOPSOIL IN AREAS WHERE TURF IS TO BE ESTABLISHED TO A MINIMUM DEPTH OF 6 INCHES.
11. FINISHED GRADING SHALL BE COMPLETED. THE CONTRACTOR SHALL UNIFORMLY GRADE AREAS WITHIN LIMITS OF GRADING, INCLUDING ADJACENT TRANSITION AREAS. PROVIDE A SMOOTH FINISHED SURFACE WITHIN SPECIFIED TOLERANCES, WITH UNIFORM LEVELS OR SLOPES BETWEEN POINTS WHERE ELEVATIONS ARE SHOWN, OR BETWEEN SUCH POINTS AND EXISTING GRADES. AREAS THAT HAVE BEEN FINISH GRADED SHALL BE PROTECTED FROM SUBSEQUENT CONSTRUCTION OPERATIONS, TRAFFIC AND EROSION. REPAIR ALL AREAS THAT HAVE BECOME RUTTED BY TRAFFIC OR ERODED BY WATER OR HAS SETTLED BELOW THE CORRECT GRADE. ALL AREAS DISTURBED BY THE CONTRACTOR'S OPERATIONS SHALL BE RESTORED TO EQUAL OR BETTER THAN ORIGINAL CONDITION OR TO THE REQUIREMENTS OF THE NEW WORK.
12. PRIOR TO PLACEMENT OF THE AGGREGATE BASE, A TEST ROLL WILL BE REQUIRED ON THE STREET AND/OR PARKING AREA SUBGRADE. THE CONTRACTOR SHALL PROVIDE A LOADED TANDEM AXLE TRUCK WITH A GROSS WEIGHT OF 25 TONS. THE TEST ROLLING SHALL BE AT THE DIRECTION OF THE SOILS ENGINEER AND SHALL BE COMPLETED IN AREAS AS DIRECTED BY THE SOILS ENGINEER. THE SOILS ENGINEER SHALL DETERMINE WHICH SECTIONS OF THE STREET OR PARKING AREA ARE UNSTABLE. CORRECTION OF THE SUBGRADE SOILS SHALL BE COMPLETED IN ACCORDANCE WITH THE REQUIREMENTS OF THE SOILS ENGINEER. NO TEST ROLL SHALL OCCUR WITHIN 10' OF ANY UNDERGROUND STORM RETENTION/DETENTION SYSTEMS.
13. TOLERANCES
    - 13.1. THE BUILDING SUBGRADE FINISHED SURFACE ELEVATION SHALL NOT VARY BY MORE THAN 0.30 FOOT ABOVE, OR 0.30 FOOT BELOW, THE PRESCRIBED ELEVATION AT ANY POINT WHERE MEASUREMENT IS MADE.
    - 13.2. THE STREET OR PARKING AREA SUBGRADE FINISHED SURFACE ELEVATION SHALL NOT VARY BY MORE THAN 0.05 FOOT ABOVE, OR 0.10 FOOT BELOW, THE PRESCRIBED ELEVATION OF ANY POINT WHERE MEASUREMENT IS MADE.
    - 13.3. AREAS WHICH ARE TO RECEIVE TOPSOIL SHALL BE GRADED TO WITHIN 0.30 FOOT ABOVE OR BELOW THE REQUIRED ELEVATION, UNLESS DIRECTED OTHERWISE BY THE ENGINEER.
    - 13.4. TOPSOIL SHALL BE GRADED TO PLUS OR MINUS 1/2 INCH OF THE SPECIFIED THICKNESS.
14. MAINTENANCE
    - 14.1. THE CONTRACTOR SHALL PROTECT NEWLY GRADED AREAS FROM TRAFFIC AND EROSION, AND KEEP AREA FREE OF TRASH AND DEBRIS.
    - 14.2. CONTRACTOR SHALL REPAIR AND REESTABLISH GRADES IN SETTLED, ERODED AND RUTTED AREAS TO SPECIFIED TOLERANCES. DURING THE CONSTRUCTION, IF REQUIRED, AND DURING THE WARRANTY PERIOD, ERODED AREAS WHERE TURF IS TO BE ESTABLISHED SHALL BE RESEEDED AND MULCHED.
    - 14.3. WHERE COMPLETED COMPACTED AREAS ARE DISTURBED BY SUBSEQUENT CONSTRUCTION OPERATIONS OR ADVERSE WEATHER, CONTRACTOR SHALL SCARIFY, SURFACE, RESHAPE, AND COMPACT TO REQUIRED DENSITY PRIOR TO FURTHER CONSTRUCTION.

## CITY OF BLOOMINGTON GRADING NOTES:

1. ALL CONSTRUCTION AND POST-CONSTRUCTION PARKING AND STORAGE OF EQUIPMENT AND MATERIALS MUST BE ON-SITE. USE OF PUBLIC STREETS FOR PRIVATE CONSTRUCTION PARKING, LOADING/UNLOADING, AND STORAGE WILL NOT BE ALLOWED.
2. CONTRACTOR SHALL OBTAIN A PUBLIC WORKS PERMIT FOR OBSTRUCTIONS AND CONCRETE WORK WITHIN THE RIGHT-OF-WAY. PERMIT IS REQUIRED PRIOR TO REMOVALS OR INSTALLATION. CONTACT PAUL JARVIS (952-563-4548, pjarvis@BloomingtonMN.gov) FOR PERMIT INFORMATION.

## EROSION CONTROL NOTES:

SEE SWPPP ON SHEETS SW1.0-SW1.5

## GRADING PLAN LEGEND:

| | |
|---|---|
| 1125 | EX. 1' CONTOUR ELEVATION INTERVAL |
| 1137 | 1.0' CONTOUR ELEVATION INTERVAL |
| 41.26 | SPOT GRADE ELEVATION (GUTTER/FLOW LINE UNLESS OTHERWISE NOTED) |
| 891.00 G | SPOT GRADE ELEVATION GUTTER |
| 891.00 TC | SPOT GRADE ELEVATION TOP OF CURB |
| 891.00 BS/TS | SPOT GRADE ELEVATION BOTTOM OF STAIRS/TOP OF STAIRS |
| 891.00 ME | SPOT GRADE ELEVATION MATCH EXISTING |
| CB | GRADE BREAK - HIGH POINTS |
| TO | CURB AND GUTTER (T.O = TIP OUT) |
| EOF=1135.52 | EMERGENCY OVERFLOW |

Know what's **below.** **Call** before you dig.

1" = 20'-0"

10'-0 0 20'-0"

2020 11:47:10 AM

CivilSite GROUP
Civil Engineering • Surveying • Landscape Architecture
4931 W. 35th Street, Suite 200
St. Louis Park, MN 55416
civilsitegroup.com 612-615-0060

PROJECT

# 8525-8545 Penn Avenue

Bloomington, Minnesota

**Penn Lake CityHomes LLC**

Bloomington, Minnesota

I HEREBY CERTIFY THAT THIS PLAN, SPECIFICATION, OR REPORT WAS PREPARED BY ME OR UNDER MY DIRECT SUPERVISION AND THAT I AM A DULY LICENSED PROFESSIONAL ENGINEER UNDER THE LAWS OF THE STATE OF MINNESOTA.

Matthew R. Pavek

DATE 08.05.20 LICENSE NO. 44263

ISSUE/SUBMITTAL SUMMARY

| DATE | DESCRIPTION |
|---|---|
| 06.17.20 | CITY SUBMITTAL |
| 08.05.20 | CITY SUBMITTAL |
| 08.28.20 | CITY RESUBMITTAL |
| 09.23.20 | CITY RESUBMITTAL |

DRAWN BY: klt REVIEWED BY: klt

PROJECT NUMBER: 19239

REVISION SUMMARY

| DATE | DESCRIPTION |
|---|---|
| 09/23/20 | CITY COMMENTS |

GRADING PLAN

C3.0

© COPYRIGHT CIVIL SITE GROUP INC

# CASE #PL2020-133

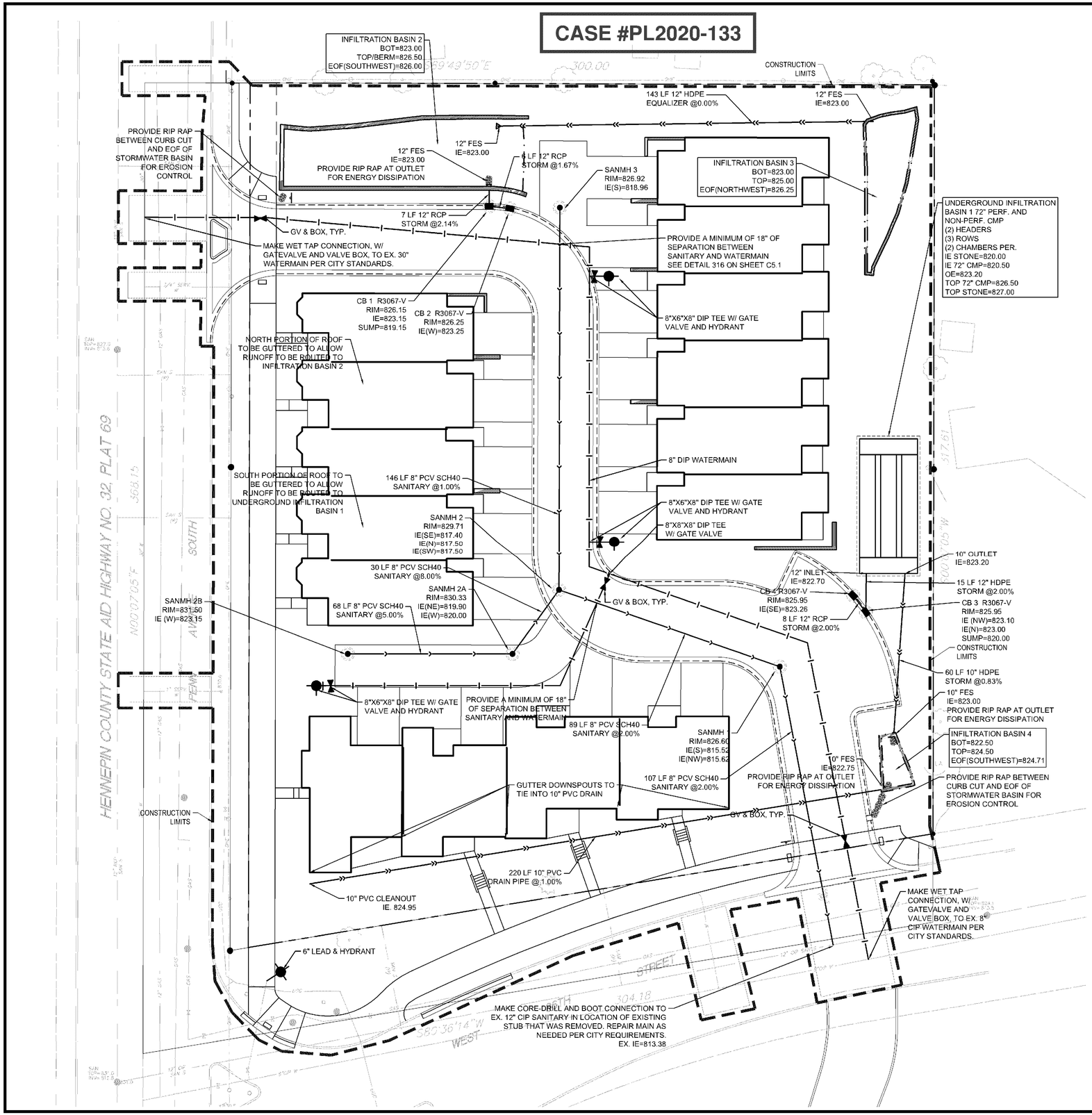


## GENERAL UTILITY NOTES:

1. SEE SITE PLAN FOR HORIZONTAL DIMENSIONS AND LAYOUT.
2. CONTRACTOR SHALL FIELD VERIFY LOCATION AND ELEVATION OF EXISTING UTILITIES AND TOPOGRAPHIC FEATURES PRIOR TO CONSTRUCTION. THE CONTRACTOR SHALL IMMEDIATELY NOTIFY THE ENGINEER OF DISCREPANCIES OR VARIATIONS FROM THE PLANS.
3. ALL EXISTING UTILITY LOCATIONS SHOWN ARE APPROXIMATE. CONTACT "GOPHER STATE ONE CALL" (651-454-0002 OR 800-252-1166) FOR UTILITY LOCATIONS, 48 HOURS PRIOR TO CONSTRUCTION. THE CONTRACTOR SHALL REPAIR OR REPLACE ANY UTILITIES THAT ARE DAMAGED DURING CONSTRUCTION AT NO COST TO THE OWNER.
4. UTILITY INSTALLATION SHALL CONFORM TO THE CURRENT EDITION OF "STANDARD SPECIFICATIONS FOR WATER MAIN AND SERVICE LINE INSTALLATION" AND "SANITARY SEWER AND STORM SEWER INSTALLATION" AS PREPARED BY THE CITY ENGINEERS ASSOCIATION OF MINNESOTA (CEAM), AND SHALL CONFORM WITH THE REQUIREMENTS OF THE CITY AND THE PROJECT SPECIFICATIONS.
5. CASTINGS SHALL BE SALVAGED FROM STRUCTURE REMOVALS AND RE-USED OR PLACED AT THE DIRECTION OF THE OWNER.
6. ALL WATER PIPE SHALL BE CLASS 52 DUCTILE IRON PIPE (DIP) AWWA C151, ASME B16.4, AWWA C110, AWWA C153 UNLESS OTHERWISE NOTED.
7. ALL SANITARY SEWER SHALL BE SDR 26 POLYVINYL CHLORIDE (PVC) ASTM D3034 & F679, OR SCH 40 ASTM D1785, 2665, ASTM F794, 1866) UNLESS OTHERWISE NOTED.
8. ALL STORM SEWER PIPE SHALL BE HDPE ASTM F714 & F2306 WITH ASTM D3212 SPEC FITTINGS UNLESS OTHERWISE NOTED.
9. PIPE LENGTHS SHOWN ARE FROM CENTER TO CENTER OF STRUCTURE OR TO END OF FLARED END SECTION.
10. UTILITIES ON THE PLAN ARE SHOWN TO WITHIN 5' OF THE BUILDING FOOTPRINT. THE CONTRACTOR IS ULTIMATELY RESPONSIBLE FOR THE FINAL CONNECTION TO BUILDING LINES. COORDINATE WITH ARCHITECTURAL AND MECHANICAL PLANS.
11. CATCH BASINS AND MANHOLES IN PAVED AREAS SHALL BE SUMPED 0.04 FEET. ALL CATCH BASINS IN GUTTERS SHALL BE SUMPED 0.15 FEET PER DETAILS. RIM ELEVATIONS SHOWN ON THIS PLAN DO NOT REFLECT SUMPED ELEVATIONS.
12. ALL FIRE HYDRANTS SHALL BE LOCATED 5 FEET BEHIND BACK OF CURB UNLESS OTHERWISE NOTED.
13. HYDRANT TYPE, VALVE, AND CONNECTION SHALL BE IN ACCORDANCE WITH CITY REQUIREMENTS. HYDRANT EXTENSIONS ARE INCIDENTAL.
14. A MINIMUM OF 8 FEET OF COVER IS REQUIRED OVER ALL WATERMAIN, UNLESS OTHERWISE NOTED. EXTRA DEPTH MAY BE REQUIRED TO MAINTAIN A MINIMUM OF 18" VERTICAL SEPARATION TO SANITARY OR STORM SEWER LINES. EXTRA DEPTH WATERMAIN IS INCIDENTAL.
15. A MINIMUM OF 18 INCHES OF VERTICAL SEPARATION AND 10 FEET OF HORIZONTAL SEPARATION IS REQUIRED FOR ALL UTILITIES, UNLESS OTHERWISE NOTED.
16. ALL CONNECTIONS TO EXISTING UTILITIES SHALL BE IN ACCORDANCE WITH CITY STANDARDS AND COORDINATED WITH THE CITY PRIOR TO CONSTRUCTION.
17. CONNECTIONS TO EXISTING STRUCTURES SHALL BE CORE-DRILLED.
18. COORDINATE LOCATIONS AND SIZES OF SERVICE CONNECTIONS WITH THE MECHANICAL DRAWINGS.
19. COORDINATE INSTALLATION AND SCHEDULING OF THE INSTALLATION OF UTILITIES WITH ADJACENT CONTRACTORS AND CITY STAFF.
20. ALL STREET REPAIRS AND PATCHING SHALL BE PERFORMED PER THE REQUIREMENTS OF THE CITY. ALL PAVEMENT CONNECTIONS SHALL BE SAWCUT. ALL TRAFFIC CONTROLS SHALL BE PROVIDED BY THE CONTRACTOR AND SHALL BE ESTABLISHED PER THE REQUIREMENTS OF THE MINNESOTA MANUAL ON UNIFORM TRAFFIC CONTROL DEVICES (MMUTCD) AND THE CITY. THIS SHALL INCLUDE BUT NOT BE LIMITED TO SIGNAGE, BARRICADES, FLASHERS, AND FLAGGERS AS NEEDED. ALL PUBLIC STREETS SHALL BE OPEN TO TRAFFIC AT ALL TIMES. NO ROAD CLOSURES SHALL BE PERMITTED WITHOUT APPROVAL BY THE CITY.
21. ALL STRUCTURES, PUBLIC AND PRIVATE, SHALL BE ADJUSTED TO PROPOSED GRADES WHERE REQUIRED. THE REQUIREMENTS OF ALL OWNERS MUST BE COMPLIED WITH. STRUCTURES BEING RESET TO PAVED AREAS MUST MEET OWNERS REQUIREMENTS FOR TRAFFIC LOADING.
22. CONTRACTOR SHALL COORDINATE ALL WORK WITH PRIVATE UTILITY COMPANIES.
23. CONTRACTOR SHALL COORDINATE CONNECTION OF IRRIGATION SERVICE TO UTILITIES. COORDINATE THE INSTALLATION OF IRRIGATION SLEEVES NECESSARY AS TO NOT IMPACT INSTALLATION OF UTILITIES.
24. CONTRACTOR SHALL MAINTAIN AS-BUILT PLANS THROUGHOUT CONSTRUCTION AND SUBMIT THESE PLANS TO ENGINEER UPON COMPLETION OF WORK.
25. ALL JOINTS AND CONNECTIONS IN STORM SEWER SYSTEM SHALL BE GASTIGHT OR WATERTIGHT. APPROVED RESILIENT RUBBER JOINTS MUST BE USED TO MAKE WATERTIGHT CONNECTIONS TO MANHOLES, CATCHBASINS, OR OTHER STRUCTURES.
26. ALL PORTIONS OF THE STORM SEWER SYSTEM LOCATED WITHIN 10 FEET OF THE BUILDING OR WATER SERVICE LINE MUST BE TESTED IN ACCORDANCE WITH MN RULES, CHAPTER 4714, SECTION 1109.0.

## CITY OF BLOOMINGTON UTILITY NOTES:

1. HDPE PIPE CONNECTIONS INTO ALL CONCRETE STRUCTURES MUST BE MADE WITH WATER TIGHT MATERIALS UTIIZING AN A-LOK OR WATERSTOP GASKET OR BOOT, CAST-IN-PLACE RUBBER BOOT, OR APPROVED EQUIAL. WHERE THE ALIGNMENT PRECLUDES THE USE OF THE APPROVED WATERTIGHT METHODS, CONSEAL 231 WATERSTOP SEALANT, OR APPROVED EQUAL WILL ONLY BE ALLOWED AS APPROVED BY THE CITY ENGINEER.
2. ALL CONSTRUCTION AND POST-CONSTRUCTION PARKING AND STORAGE OF EQUIPMENT AND MATERIALS MUST BE ON-SITE. USE OF PUBLIC STREETS FOR PRIVATE CONSTRUCTION PARKING, LOADING/UNLOADING, AND STORAGE WILL NOT BE ALLOWED.
3. UTILITY PERMITS ARE REQUIRED FOR CONNECTIONS TO THE PUBLIC STORM, SANITARY, AND WATER SYSTEM. CONTACT UTILITIES (952-563-8777) FOR PERMIT INFORMATION.
4. ALL COMPONENTS OF THE WATER SYSTEM, UP TO THE WATER METER OR FIRE SERVICE EQUIPMENT MUST UTILIZE PROTECTIVE INTERNAL COATINGS MEETING CURRENT ANSI/AWWA STANDARDS FOR CEMENT MORTAR LINING OR SPECIAL COATINGS. THE USE OF UNLINED OR UNCOATED PIPE IS NOT ALLOWED.
5. USE CLASS 52 DIP WATER MAIN FOR PIPE 12-INCHES IN DIAMETER AND SMALLER. A MINIMUM 8 MIL POLYWRAP IS REQUIRED ON ALL DIP.
6. PROVIDE A MINIMUM OF 8-FEET AND A MAXIMUM OF 10-FEET OF COVER OVER ALL WATER LINES, VALVES, SERVICES, ETC.
7. COMBINATION FIRE AND DOMESTIC SERVICES MUST TERMINATE WITH A THREAD ON FLANGE OR AN MJ TO FLANGE ADAPTER.
8. CONTRACTOR TO PROVIDE AND INSTALL INTERIOR CHIMNEY SEALS ON ALL SANITARY MANHOLES.

## UTILITY LEGEND:

- CATCH BASIN
- MANHOLE
- GATE VALVE AND VALVE BOX
- PROPOSED FIRE HYDRANT
- WATER MAIN
- SANITARY SEWER
- STORM SEWER
- FES AND RIP RAP

Know what's **below.** **Call** before you dig.

N

1" = 20'-0"
10'-0" 0 20'-0"

9/23/2020 11:47:20 AM


CivilSite GROUP
Civil Engineering • Surveying • Landscape Architecture
4931 W. 35th Street, Suite 200
St. Louis Park, MN 55416
civilsitegroup.com 612-615-0060


PROJECT
**8525-8545 Penn Avenue**
Bloomington, Minnesota
**Penn Lake CityHomes LLC**
Bloomington, Minnesota

I HEREBY CERTIFY THAT THIS PLAN, SPECIFICATION, OR REPORT WAS PREPARED BY ME OR UNDER MY DIRECT SUPERVISION AND THAT I AM A DULY LICENSED PROFESSIONAL ENGINEER UNDER THE LAWS OF THE STATE OF MINNESOTA.

Matthew R. Pavek
DATE 08.05.20 LICENSE NO. 44263

ISSUE/SUBMITTAL SUMMARY

| DATE | DESCRIPTION |
|---|---|
| 06.17.20 | CITY SUBMITTAL |
| 06.05.20 | CITY SUBMITTAL |
| 08.28.20 | CITY RE-SUBMITTAL |
| 09.23.20 | CITY RE-SUBMITTAL |

DRAWN BY: kit REVIEWED BY: kit
PROJECT NUMBER: 19239

REVISION SUMMARY

| DATE | DESCRIPTION |
|---|---|
| 09/23/20 | CITY COMMENTS |

UTILITY PLAN

C4.0

© COPYRIGHT CIVIL SITE GROUP INC.

CASE #PL2020-133

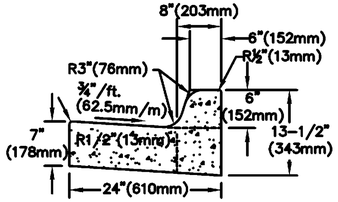


105 – B618 STANDARD CURB & GUTTER
105 – C&G (Bloom Std).dwg 5/2015

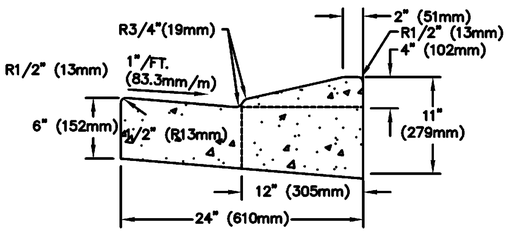


108 – MOUNTABLE CURB & GUTTER
108 – C&G (Mountable).dwg 5/2015

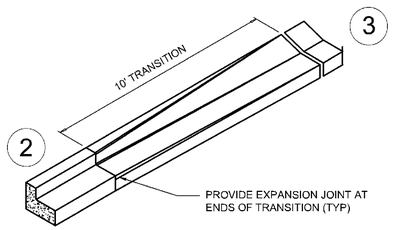


1 CURB TRANSITION - SURMOUNTABLE TO B618
NTS

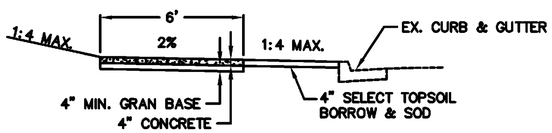


120 – TYPICAL SIDEWALK INSTALLATION
120 – Typ Conc. Walk.dwg 9/2016

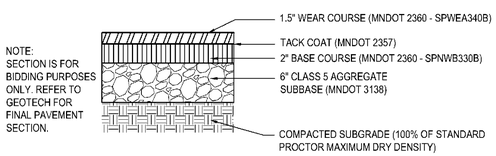


2 LIGHT DUTY BITUMINOUS PAVEMENT
NTS

NOTE:
- EACH DRIVEWAY PANEL NOT TO EXCEED 100 SF.
- REINFORCEMENT BARS OR WELDED WIRE FABRIC (STEEL MESH) ARE NOT ALLOWED IN THE RIGHT-OF-WAY
- CLASS 5 AGGREGATE BASE REQUIRED UNDER CURB AND GUTTER.
- IF PRESENT, STREET LIGHT, SIGNAL AND INTERCONNECT CONDUIT OR DIRECT BURIED STREET LIGHT WIRING MUST BE EXPOSED FOR INSPECTION PRIOR TO POUR

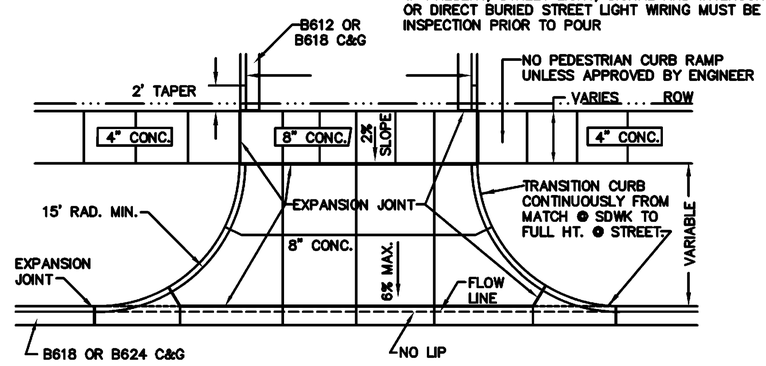


100 – NONRESIDENTIAL DRIVEWAY APPROACH
WITH BOULEVARD SIDEWALK
100 – Drwy (Commercial).dwg 5/2015

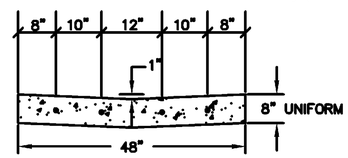


VALLEY GUTTER – SECTION A–A

NOTES:
- 8" CONCRETE PAVEMENT MEASURED OUTSIDE NORMAL CURB AND GUTTER.
- WHEN PAID SEPARATELY #4 REBAR WILL BE PAID AT 0.67 LBS/LF
- BARS SHALL BE GRADE 60 STEEL
- CHAIRS OR BASKETS ARE REQUIRED (INCIDENTAL)
- WHEN CONSTRUCTING IN HALVES, EXTEND BARS 4' INTO ADJACENT POUR AREA

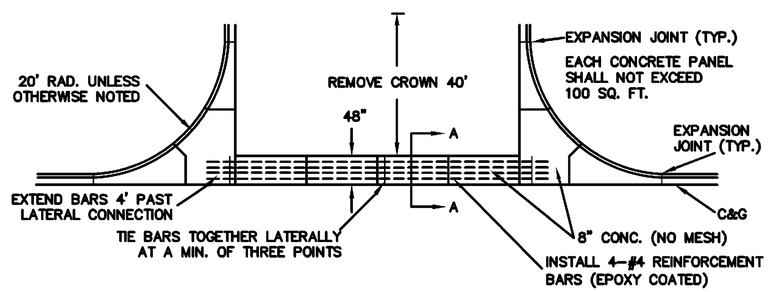


116 – VALLEY GUTTER AT INTERSECTION
116 – Valley Gutter.dwg 5/2015

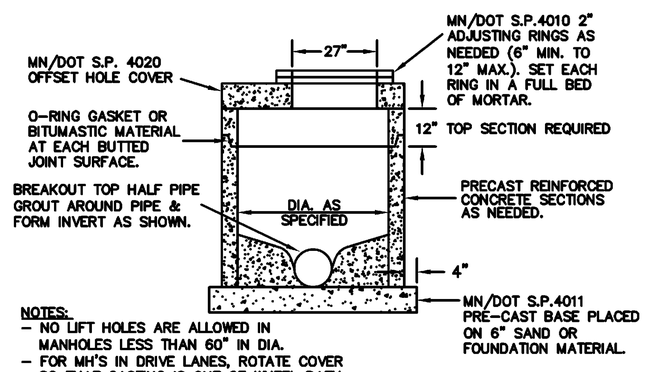


NOTES:
- NO LIFT HOLES ARE ALLOWED IN MANHOLES LESS THAN 60" IN DIA.
- FOR MH'S IN DRIVE LANES, ROTATE COVER SO THAT CASTING IS OUT OF WHEEL PATH, AS APPROVED.

200 – STANDARD MANHOLE
DESIGN SPEC X, X & X
200 – STD_MH.DWG 9/2013

PRESTO PRODUCTS CO.
670 NORTH PERKINS STREET
APPLETON, WI 54914
920–738–1342
WWW.PRESTOGEO.COM

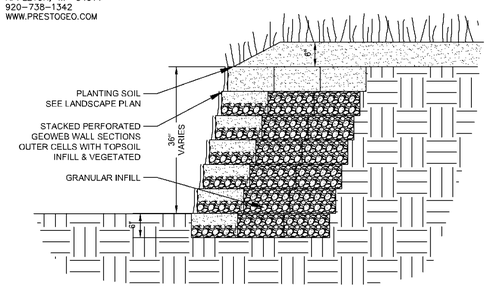


3 VEGETATED GRAVITY WALL (GEOWEB) 36" HEIGHT
NTS

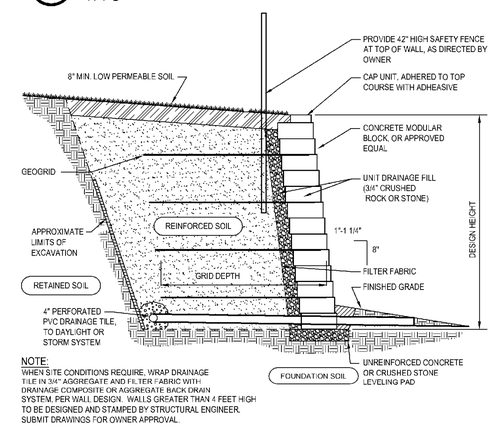


NOTE:
WHEN SITE CONDITIONS REQUIRE, WRAP DRAINAGE TILE IN 3/4" AGGREGATE AND FILTER FABRIC WITH DRAINAGE COMPOSITE OR AGGREGATE BACK DRAIN SYSTEM, PER WALL DESIGN. WALLS GREATER THAN 4 FEET HIGH TO BE DESIGNED AND STAMPED BY STRUCTURAL ENGINEER. SUBMIT DRAWINGS FOR OWNER APPROVAL.

NOTES:
1. THESE SECTIONS ARE FOR ESTIMATING PURPOSES ONLY. CONTRACTOR TO SUBMIT TO LANDSCAPE ARCHITECT CERTIFIED DRAWING BY A MINNESOTA PROFESSIONAL ENGINEER ON STAFF WITH RETAINING WALL MANUFACTURE PRIOR TO WALL INSTALLATION. PREPARATION AND CERTIFICATION TO BE PAID FOR BY THE CONTRACTOR. SECTION AND ELEVATION OF EACH WALL REQUIRED.
2. ALL SOIL PARAMETERS SHALL BE VERIFIED BY A GEOTECHNICAL CONSULTANT OR SITE ENGINEER PRIOR TO CONSTRUCTION. IF ACTUAL SITE CONDITIONS DIFFER FROM THOSE ASSUMED, NOTIFY MANUFACTURER OF C.M.U. RETAINING WALL 72 HOURS PRIOR TO INSTALLATION.
3.
4. RAILING IS REQUIRED ON RETAINING WALLS IN LOCATIONS WHERE DIFFERENCES IN GRADE ON EITHER SIDE OF THE WALL ARE IN EXCESS OF 2.5' AND ARE LOCATED CLOSER THAN 4' TO A WALK, PATH, PARKING AREA, OR DRIVE ACCESS ON THE HIGH SIDE-SEE PLANS.
5. COORDINATE LOCATION AND INSTALLATION OF RAILING POSTS AND FOOTINGS DURING THE INSTALLATION OF WALL MATERIALS.
6. COORDINATE INSTALLATION OF RAIL POSTS AND FOOTINGS WITH INSTALLATION AND LOCATION OF GEOGRID REINFORCEMENT. AT NO POINT THROUGHOUT THE DURATION OF THE CONTRACT SHALL CONTRACTOR ALTER THE INTEGRITY OF THE GEOGRID OR WALL MATERIALS.
7. AIR DRIVE RAILING FOOTINGS AS SPECIFIED AND IN A MANNER TO NOT DISTURB THE WALL GEOGRID AS RECOMMENDED BY THE WALL MANUFACTURER. COORDINATE INSTALLATION AND SCHEDULING OF RAILING FOOTING WITH WALL MANUFACTURER TO OBSERVE INSTALLATION OF RAILING FOOTINGS.

4 RETAINING WALL
NTS

ADJUSTING RINGS
- SHALL BE PRECAST, 2" THICK, AND REINFORCED WITH 8 GAUGE STEEL WIRE.
- SET EACH RING IN A FULL BED OF MORTAR.
- TOTAL ADJUSTMENT HEIGHT SHALL BE BETWEEN 6" AND 12".

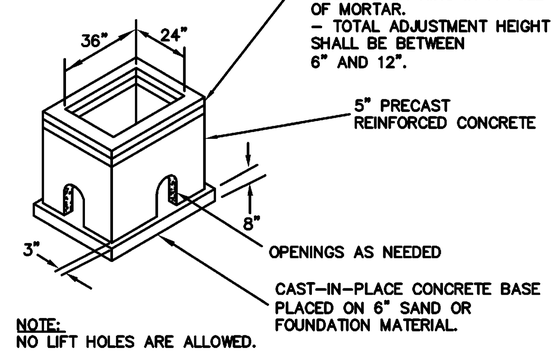


NOTE:
NO LIFT HOLES ARE ALLOWED.

206 – STD CB
206 – STD CB.DWG 9/2016

8/26/2020 3:49:15 PM


CivilSite GROUP
Civil Engineering • Surveying • Landscape Architecture
4931 W. 35th Street, Suite 200
St. Louis Park, MN 55416
civilsitegroup.com 612-615-0060


PROJECT
8525-8545 Penn Avenue
Bloomington, Minnesota

Penn Lake CityHomes LLC
Bloomington, Minnesota

I HEREBY CERTIFY THAT THIS PLAN, SPECIFICATION, OR REPORT WAS PREPARED BY ME OR UNDER MY DIRECT SUPERVISION AND THAT I AM A DULY LICENSED PROFESSIONAL ENGINEER UNDER THE LAWS OF THE STATE OF MINNESOTA.

Matthew R. Pavek
DATE 08.05.20 LICENSE NO. 44263

ISSUE/SUBMITTAL SUMMARY

| DATE | DESCRIPTION |
|---|---|
| 06.17.20 | CITY SUBMITTAL |
| 06.05.20 | CITY SUBMITTAL |
| 06.29.20 | CITY RESUBMITTAL |

DRAWN BY: kit REVIEWED BY: kit
PROJECT NUMBER: 19239

REVISION SUMMARY

| DATE | DESCRIPTION |
|---|---|

CIVIL DETAILS

C5.0

© COPYRIGHT CIVIL SITE GROUP INC.

**CASE #PL2020-133**

- HYDRANT TO BE:
  - WATEROUS PACER CLASSIC.
  - MUELLER SUPERCENTURION 250 MODEL A-423.
  - OR APPROVED EQUAL.
- EQUIP WITH THREE HOSE NOZZLES/CONNECTIONS AS FOLLOWS:
  - ONE – FACTORY INSTALLED 5 INCH STORZ-TYPE, QUARTER TURN PUMPER NOZZLE/CONNECTOR, INCLUDING A MANUFACTURER SUPPLIED AND INSTALLED ANODIZED ALUMINUM NOZZLE CAP WITH A 1.5 INCH PENTAGON NUT AND NO ROCKER LUG.
  - TWO – 2.5 INCH HOSE NOZZLES/CONNECTIONS (WITH NATIONAL STANDARD THREADS) AND STANDARD NOZZLE CAPS WITH 1.5 INCH PENTAGON NUTS, AND NO ROCKER LUGS.
- USE SS NUTS AND BOLTS AS APPROVED BY THE ENGINEER.
- ALL EXPOSED WATERMAIN SHALL BE WRAPPED WITH POLYETHYLENE IN ACCORDANCE WITH AWWA C-105.
- BARREL TO BE BRIGHT RED.
- ALL VALVES TO OPEN COUNTER-CLOCKWISE.
- SEE TYPICAL VALVE INSTALLATION DETAIL FOR VALVE DETAILS.
- WATEROUS PACER CLASSIC HYDRANTS SHALL INCLUDE INSTALLATION OF THE MANUFACTURERS MOST CURRENT ANTI-CHATTER BRASS UPPER VALVE WASHER.

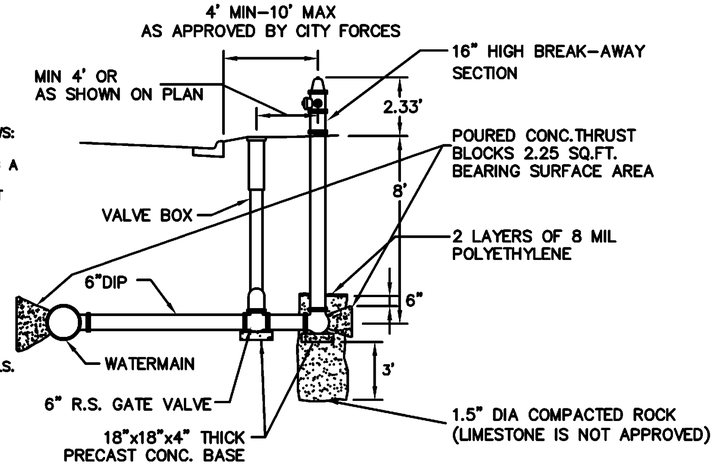


300 – TYPICAL HYDRANT INSTALLATION
300 – Hyd Install.dwg 6/2015

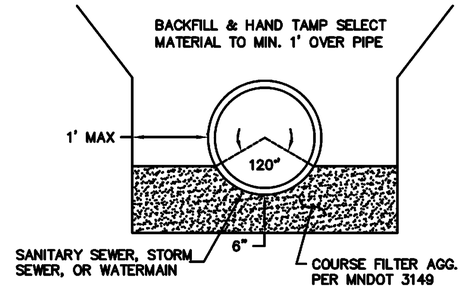


307 – FOUNDATION MATERIAL DETAIL
307 – Foundation Material.dwg 6/2015

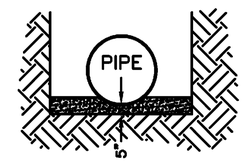


PIPE BEDDED IN GRANULAR BEDDING TO DEPTH OF 5 INCHES. BACKFILL COMPACTED TO FINISHED GRADE.

309 – PIPE BEDDING DETAIL
309 – Pipe Bedding.dwg 6/2015

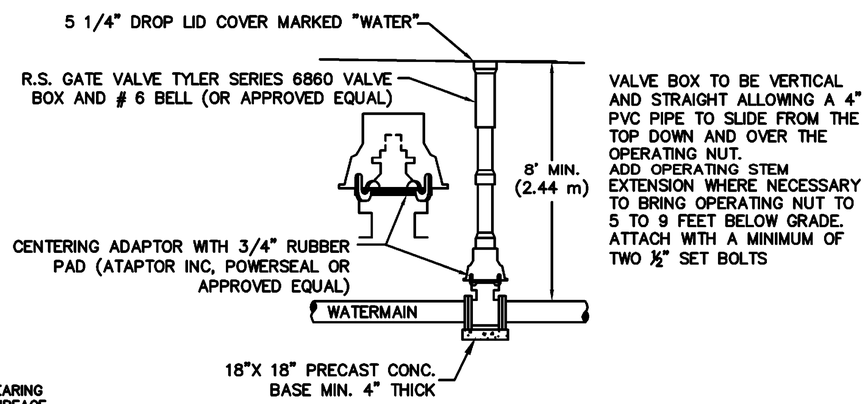


302 – TYPICAL VALVE INSTALLATION
302 – Valve (RSGV).dwg 6/2015

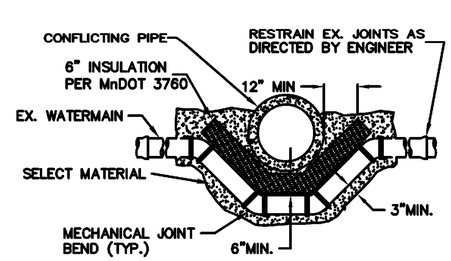


1. ALL JOINTS SHALL BE RESTRAINED WITH EBAA IRON MEGALUG, STAR D-SLDE, SIGMA ONE-LOK SLDE OR APPROVED EQUAL.
2. NO WATERMAIN SHALL BE RODDED UNDER ANY CIRCUMSTANCE.
3. ALL EXPOSED WATERMAIN SHALL BE WRAPPED WITH POLYETHYLENE IN ACCORDANCE WITH AWWA C-105.
4. INSULATION AND FOUNDATION MATERIAL SHALL EXTEND IN BOTH DIRECTIONS A MIN. OF 3' BEYOND THE STORM SEWER & WATERMAIN.
5. MECHANICAL JOINT OFFSET MAY BE USED IF AMOUNT OF OFFSET IS 18" OR LESS.
6. CONDUCTIVITY ACROSS JOINTS IS REQUIRED.
7. INSTALL INSULATION WITH OVERLAPPING JOINTS.
8. LENGTH OF JOINT RESTRAINT TO CONFORM TO DIPRA REQUIREMENTS CONCRETE ANCHOR BLOCKS MAY BE REQUIRED AT VERTICAL BENDS.

316 – WM ALTERATION 1
316 – WM ALTERATION 1.DWG 5/2017

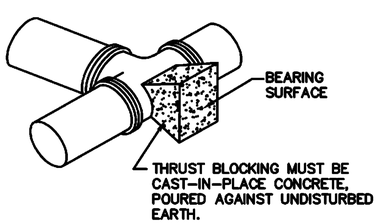


| PIPE SIZE | BEARING AREA |
|---|---|
| 6" | 2.25 SF |
| 8" | 4 SF |

NOTES:

1. THRUST BLOCKS TO BE USED FOR BENDS 22 1/2° AND OVER, INCLUDING HYDRANTS AND HYDRANT TEES.
2. THRUST BLOCKS ARE REQUIRED REGARDLESS OF ANY OTHER RESTRAINT METHODS USED ON WATERMAIN LESS THAN 12" IN DIA.
3. RESTRAINT METHODS ON WATERMAIN LARGER THAN 12" SHALL BE MEGALUGS, LOCKING GASKETS OR OTHER APPROVED EQUAL. THE LENGTH OF RESTRAINT SHALL BE AS COMPUTED BY DIPRA.

310 – STANDARD THRUST BLOCK
310 – Thrust Blk (Std).dwg 6/2015

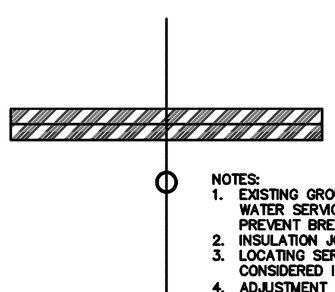

NOTES:

1. EXISTING GROUND AROUND AND ADJACENT TO WATER SERVICE SHALL BE COMPACTED TO PREVENT BREAKAGE OF INSULATION
2. INSULATION JOINTS SHALL BE STAGGERED
3. LOCATING SERVICE AND EXCAVATION ARE CONSIDERED INCIDENTAL
4. ADJUSTMENT OF CURB STOP (WHEN REQUIRED) SHALL BE PAID PER THE UNIT BID PRICE

305 – WATER SERVICE INSULATION
305 – Wat Serv Insul.dwg 6/2015

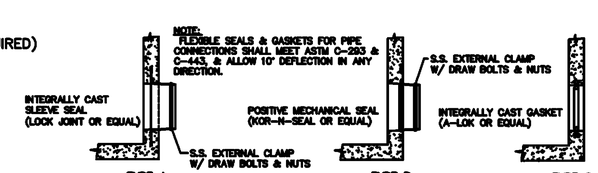


WATER TIGHT PIPE CONNECTIONS
MH_PIPE_CON.dwg 4/2009

8/26/2020 3:49:20 PM


CivilSite GROUP
Civil Engineering • Surveying • Landscape Architecture
4931 W. 35th Street, Suite 200
St. Louis Park, MN 55416
civilsitegroup.com 612-615-0060


PROJECT
**8525-8545 Penn Avenue**
Bloomington, Minnesota

**Penn Lake CityHomes LLC**
Bloomington, Minnesota

I HEREBY CERTIFY THAT THIS PLAN, SPECIFICATION, OR REPORT WAS PREPARED BY ME OR UNDER MY DIRECT SUPERVISION AND THAT I AM A DULY LICENSED PROFESSIONAL ENGINEER UNDER THE LAWS OF THE STATE OF MINNESOTA.

Matthew R. Pavek

DATE 08.05.20 LICENSE NO. 44263

ISSUE/SUBMITTAL SUMMARY

| DATE | DESCRIPTION |
|---|---|
| 06.17.20 | CITY SUBMITTAL |
| 06.05.20 | CITY SUBMITTAL |
| 08.26.20 | CITY RESUBMITTAL |

DRAWN BY: kit REVIEWED BY: kit
PROJECT NUMBER: 19239

REVISION SUMMARY

| DATE | DESCRIPTION |
|---|---|

CIVIL DETAILS

C5.1

© COPYRIGHT CIVIL SITE GROUP INC.

| CASTING SCHEDULE | | |
|---|---|---|
| CATCH BASIN/MANHOLE/RISER | GRATE TYPE (NEENAH) | REMARKS |
| 31, 32, 32A, 33, 33, 34, 34A, 35, 42, 42A, 43, 44 | R-3067 | STORM CURB INLET |
| 13, 45 | R-1642 | STORM MANHOLE |
| 46, 47 | R-2501 | STORM AREA DRAIN INLET |

NOTE:
1. CASTINGS SHALL BE NEENAH FOUNDRY CASTINGS OR APPROVED EQUIVALENT.
2. CASTINGS SHALL BE STAMPED WITH APPROPRIATE UTILITY NAME ("STORM SEWER", "SANITARY SEWER")

1 CASTING SCHEDULE
NTS

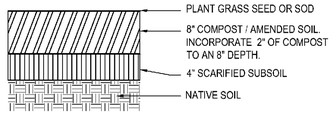


2 AMENDED SOIL DETAIL
NTS

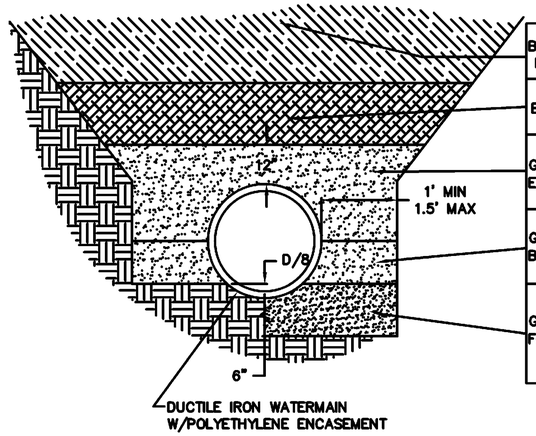


| | |
|---|---|
| BACKFILL UPPER 3 FEET | SELECT MATERIAL IN 12" LIFTS COMPACTED TO 100% STANDARD PROCTOR DENSITY |
| BACKFILL | SELECT MATERIAL IN 12" LIFTS COMPACTED TO 95% STANDARD PROCTOR DENSITY |
| GRANULAR ENCASEMENT | 1" MINUS MnDOT GRANULAR BORROW 3149.2B1–COMPACTION BY HAND AND PORTABLE COMPACTION EQUIPMENT |
| GRANULAR BEDDING | 1" MINUS MnDOT GRANULAR BORROW 3149.2B1–COMPACTION BY HAND AND PORTABLE COMPACTION EQUIPMENT |
| GRANULAR FOUNDATION | COARSE FILTER AGGREGATE MnDOT 3149: 1 1/2" MINUS, <10% PASSING #4 SIEVE (WHERE NECESSARY TO REPLACE UNSUITABLE/UNSTABLE SOILS) |

308 – TYPICAL WATER MAIN INSTALLATION DETAIL
308 – Watermain Install.dwg 6/2015

**CASE #PL2020-133**

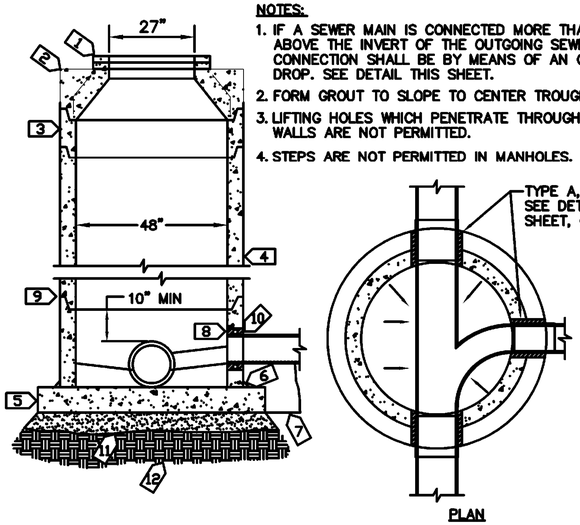


NOTES:
1. IF A SEWER MAIN IS CONNECTED MORE THAN 24" ABOVE THE INVERT OF THE OUTGOING SEWER, CONNECTION SHALL BE BY MEANS OF AN OUTSIDE DROP. SEE DETAIL THIS SHEET.
2. FORM GROUT TO SLOPE TO CENTER TROUGH.
3. LIFTING HOLES WHICH PENETRATE THROUGH SECTION WALLS ARE NOT PERMITTED.
4. STEPS ARE NOT PERMITTED IN MANHOLES.

KEY NOTES:
1. MN/DOT S.P.4010 2" ADJUSTING RINGS AS NEEDED [6" MIN. TO 12" MAX.]. SET EACH RING IN FULL BED OF MORTAR.
2. MN/DOT S.P.4010 TYPE C ALTERNATE SHORT CONE SECTION.
3. 12" TOP SECTION REQUIRED.
4. USE ONLY PRECAST SECTIONS. NO BRICK OR BLOCK
5. 8" CAST IN–PLACE CONCRETE OR 6" PRECAST REINFORCED CONCRETE (64" MINIMUM OD)
6. CEMENT MORTAR ALL AROUND
7. LEAN CONCRETE TO BEAR AGAINST FIRM UNDISTURBED SOIL
8. PROVIDE WATER TIGHT PIPE CONNECTIONS SEE DETAIL THIS SHEET
9. O–RING GASKET
10. FOR CONNECTION TO EXISTING MH'S, CORE DRILL OPENING AND PROVIDE TYPE B WATER TIGHT CONNECTOR
11. 6" SAND OR FOUNDATION MATERIAL
12. UNDISTURBED SOIL OR COMPACTED SUBGRADE

400 – STD. SANITARY SEWER MH
400 – Std San MH.dwg 6/2015

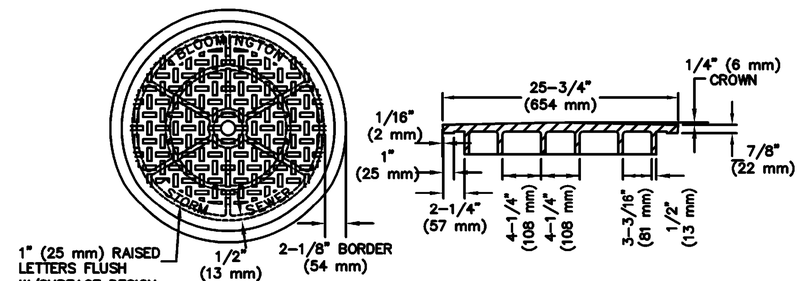


NOTES:
–NEENAH SOLID OR APPROVED EQUAL.
–TO BE USED WITH MNDOT RING CASTING NO. 700–7, SP 4101.

500 – STANDARD STORM SEWER MANHOLE COVER
500 – Storm Cov (Solid).dwg 5/2015


CivilSite GROUP
Civil Engineering • Surveying • Landscape Architecture
4931 W. 35th Street, Suite 200
St. Louis Park, MN 55416
civilsitegroup.com 612-615-0060


PROJECT
**8525-8545 Penn Avenue**
Bloomington, Minnesota

**Penn Lake CityHomes LLC**
Bloomington, Minnesota

I HEREBY CERTIFY THAT THIS PLAN, SPECIFICATION, OR REPORT WAS PREPARED BY ME OR UNDER MY DIRECT SUPERVISION AND THAT I AM A DULY LICENSED PROFESSIONAL ENGINEER UNDER THE LAWS OF THE STATE OF MINNESOTA.

Matthew R. Pavek
DATE 08.05.20 LICENSE NO. 44263

ISSUE/SUBMITTAL SUMMARY

| DATE | DESCRIPTION |
|---|---|
| 06.17.20 | CITY SUBMITTAL |
| 06.05.20 | CITY SUBMITTAL |
| 06.26.20 | CITY RE-SUBMITTAL |

DRAWN BY: kit REVIEWED BY: kit
PROJECT NUMBER: 19239

REVISION SUMMARY

| DATE | DESCRIPTION |
|---|---|

CIVIL DETAILS

C5.2

© COPYRIGHT CIVIL SITE GROUP INC.

8/26/2020 3:49:25 PM

**CASE #PL2020-133**

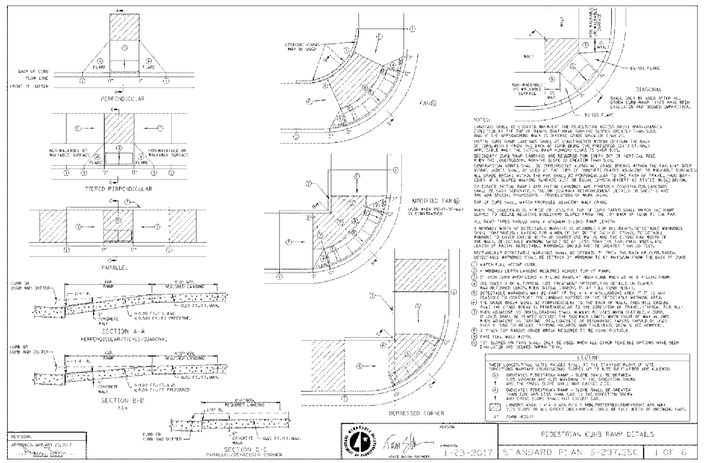


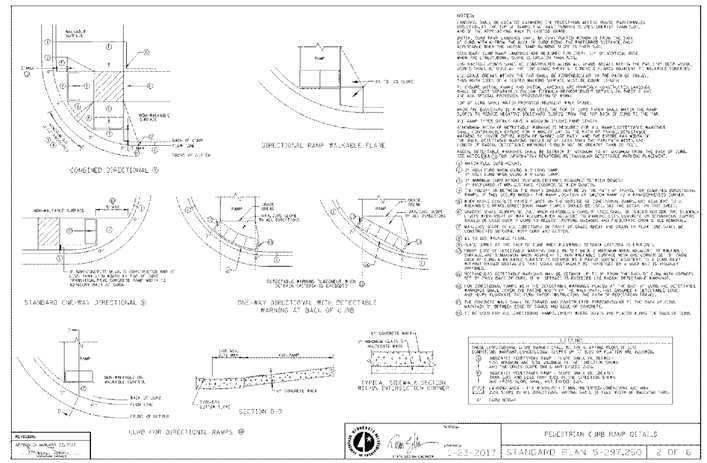


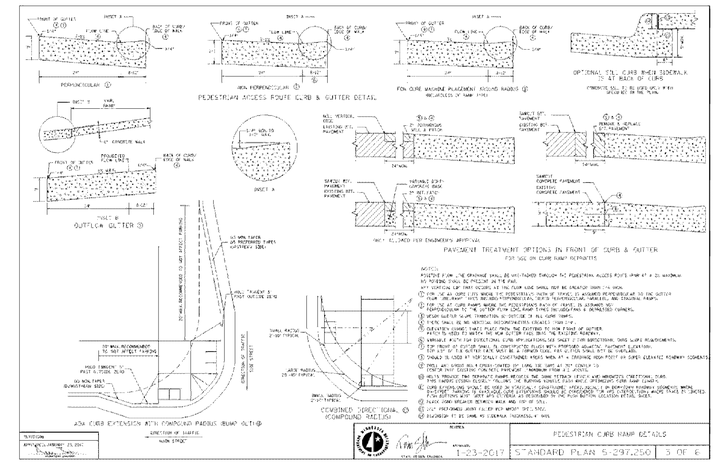


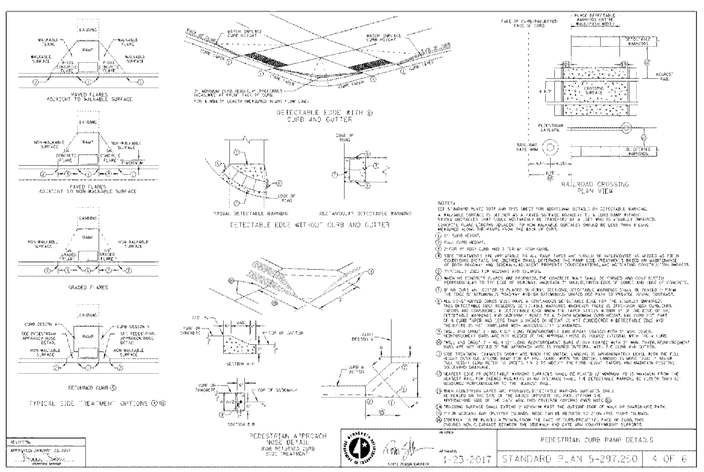


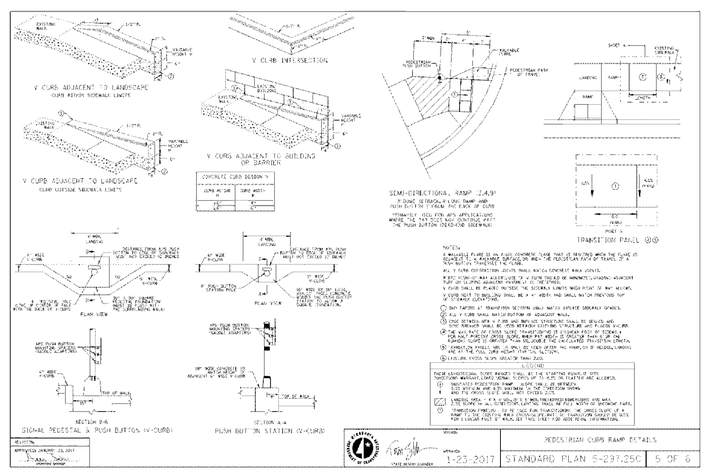


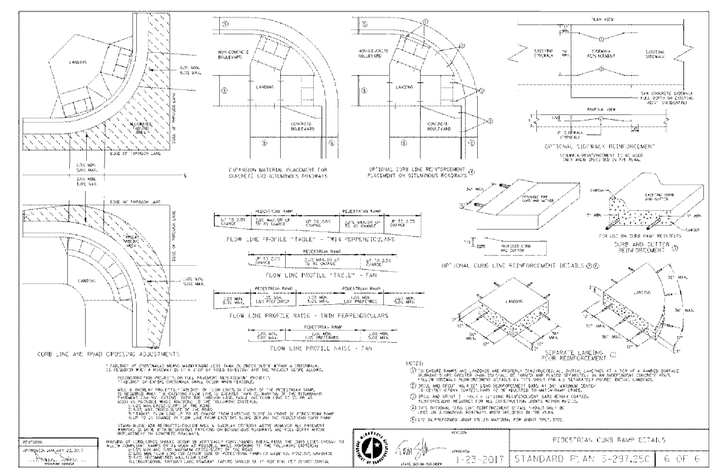



CivilSite GROUP
Civil Engineering • Surveying • Landscape Architecture
4931 W. 35th Street, Suite 200
St. Louis Park, MN 55416
civilsitegroup.com 612-615-0060


PROJECT
# 8525-8545 Penn Avenue
Bloomington, Minnesota

**Penn Lake CityHomes LLC**
Bloomington, Minnesota

I HEREBY CERTIFY THAT THIS PLAN, SPECIFICATION, OR REPORT WAS PREPARED BY ME OR UNDER MY DIRECT SUPERVISION AND THAT I AM A DULY LICENSED PROFESSIONAL ENGINEER UNDER THE LAWS OF THE STATE OF MINNESOTA.

Matthew R. Pavek
DATE 08.05.20 LICENSE NO. 44263

ISSUE/SUBMITTAL SUMMARY

| DATE | DESCRIPTION |
|---|---|
| 06.17.20 | CITY SUBMITTAL |
| 06.05.20 | CITY SUBMITTAL |
| 06.26.20 | CITY RESUBMITTAL |

DRAWN BY: kit REVIEWED BY: kit
PROJECT NUMBER: 19239

REVISION SUMMARY

| DATE | DESCRIPTION |
|---|---|

CIVIL DETAILS

C5.3

8/26/2020 3:49:26 PM

© COPYRIGHT CIVIL SITE GROUP INC.

**CASE #PL2020-133**

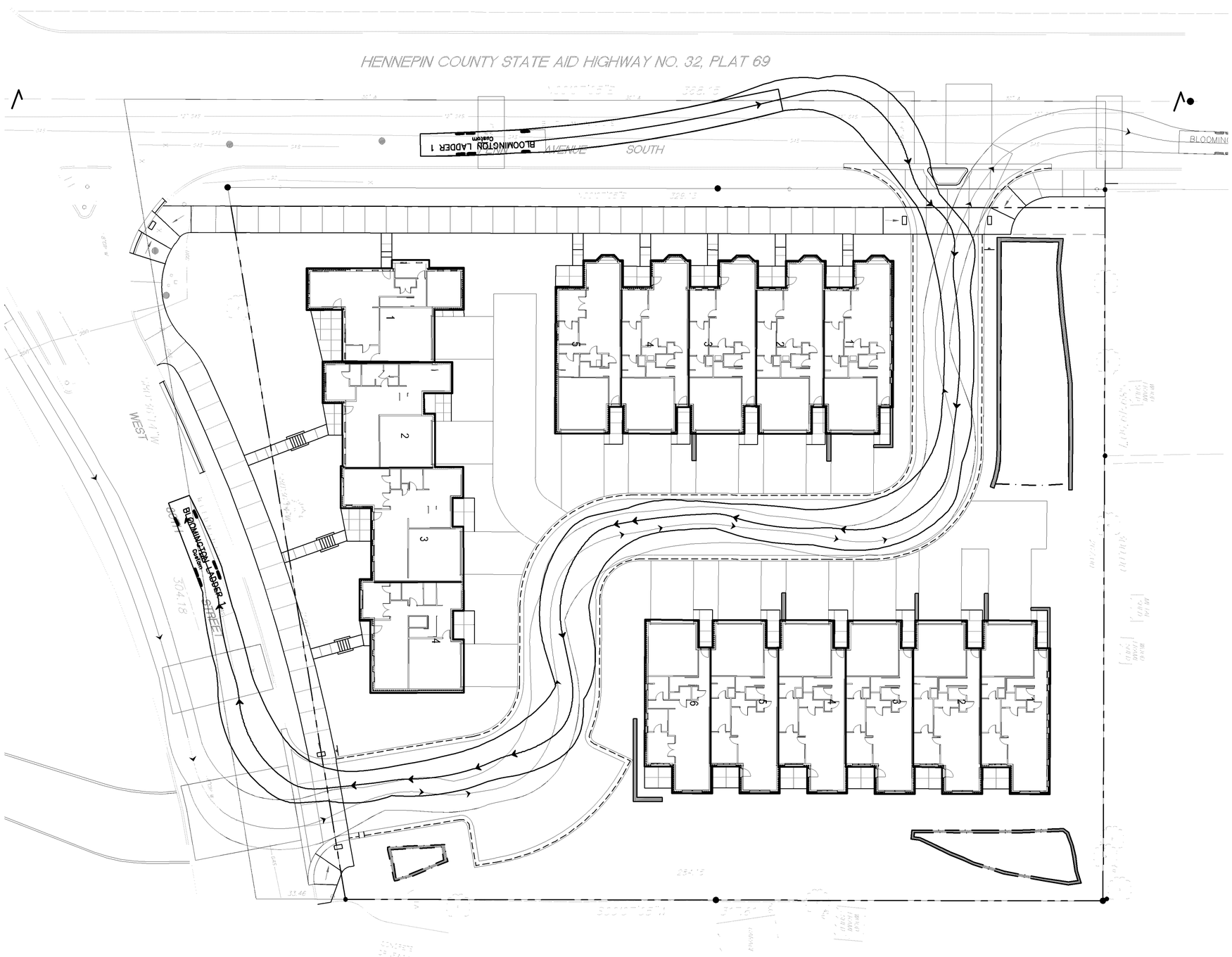


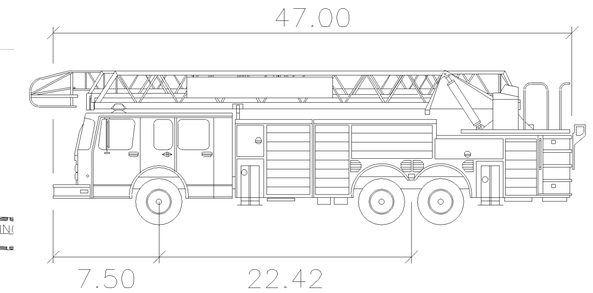


Ladder 4 Bloomington

| | feet |
|---|---|
| Width | : 8.42 |
| Track | : 8.42 |
| Lock to Lock Time | : 6.0 |
| Steering Angle | : 33.0 |

N

1" = 20'-0"
10'-0" 0 20'-0"

8525-8545 Penn Avenue S.

BLOOMINGTON, MINNESOTA

4931 W. 35TH ST., #200
ST. LOUIS PARK, MN 55416
952.250.2003 / 763.213.394
www.CivilSiteGroup.com

# FIRE TRUCK TURN

| | | | |
|---|---|---|---|
| Project Number: | 19239 | Revision Number: | 1 |
| Issue Date: | 2020.08.19 | Revision Date: | 2020.08.26 |

EX 1

OPENSPACE AREA: 26,515 SF (33.3%)
(26,515 SF / 79,573 SF)

N

1" = 40'-0"
20'-0' 0 40'-0"

CivilSite GROUP

4931 W. 35TH ST., #200
ST. LOUIS PARK, MN 55416
952.250.2003 / 763.213.1394
www.CivilSiteGroup.com

8525-8545 Penn Avenue S.

# Openspace Exhibit

BLOOMINGTON, MINNESOTA

| | | | |
|---|---|---|---|
| Project Number | 10239 | Revision Number | EX 2 |
| Issue Date | 2020.08.28 | Revision Date | |

# CASE #PL2020-133

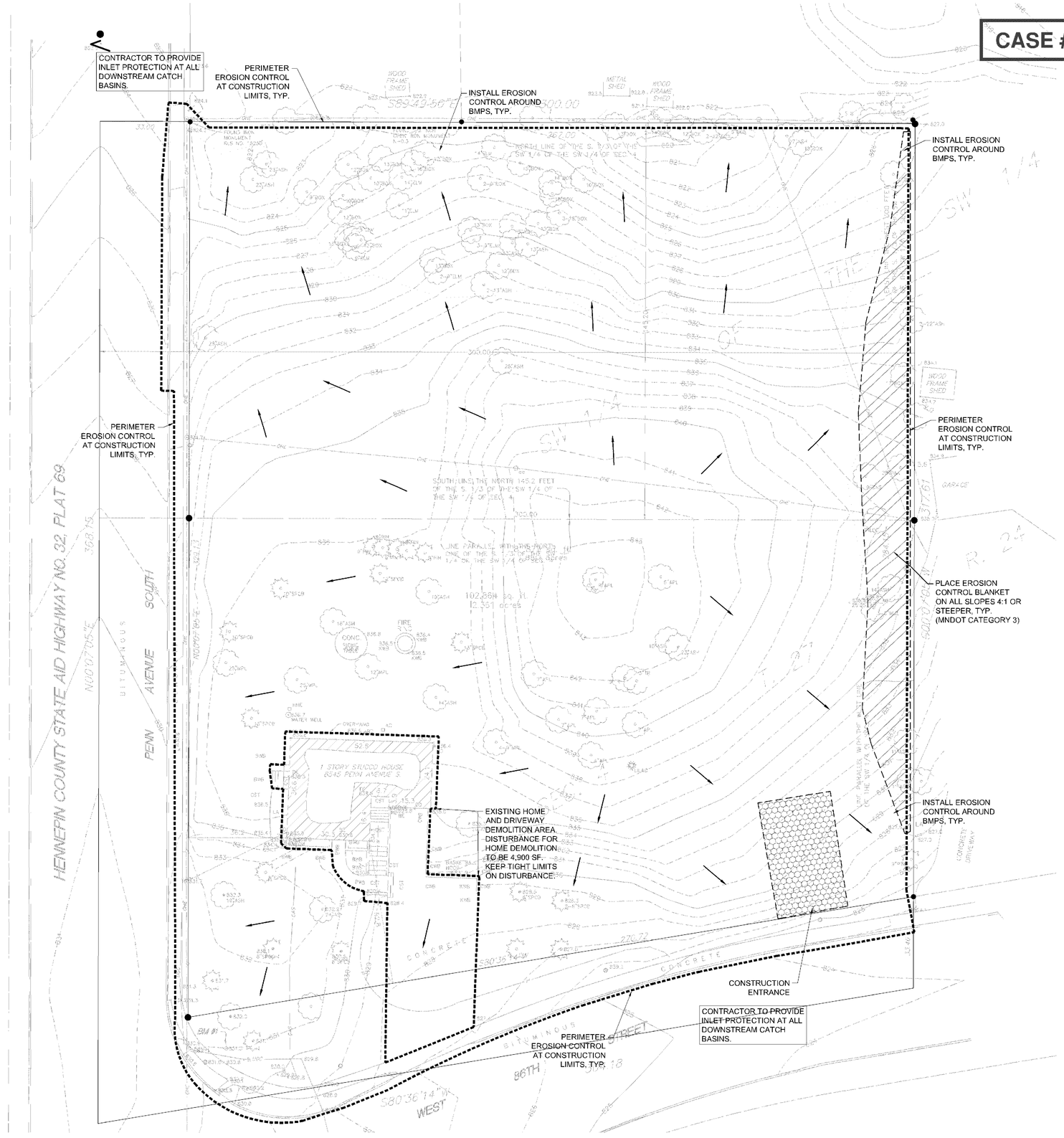


## SWPPP NOTES:

1. THIS PROJECT IS GREATER THAN ONE ACRE AND WILL REQUIRE AN MPCA NPDES PERMIT. CONTRACTOR IS RESPONSIBLE FOR OBTAINING ANY EROSION CONTROL PERMITS REQUIRED BY THE CITY.

2. SEE SHEETS SW1.0 - SW1.5 FOR ALL EROSION CONTROL NOTES, DESCRIPTIONS, AND PRACTICES.

3. SEE GRADING PLAN FOR ADDITIONAL GRADING AND EROSION CONTROL NOTES.

4. CONTRACTOR IS RESPONSIBLE FOR SWPPP IMPLEMENTATION, INSPECTIONS, AND COMPLIANCE WITH NPDES PERMIT.

## CITY OF BLOOMINGTON EROSION CONTROL NOTES:

1. ALL CONSTRUCTION AND POST-CONSTRUCTION PARKING AND STORAGE OF EQUIPMENT AND MATERIALS MUST BE ON-SITE. USE OF PUBLIC STREETS FOR PRIVATE CONSTRUCTION PARKING, LOADING/UNLOADING, AND STORAGE WILL NOT BE ALLOWED.

ALL SPECIFIED EROSION AND SEDIMENT CONTROL PRACTICES, AND MEASURES CONTAINED IN THIS SWPPP ARE THE MINIMUM REQUIREMENTS. ADDITIONAL PRACTICES MAY BE REQUIRED DURING THE COURSE OF CONSTRUCTION.

## LEGEND:

- EX. 1' CONTOUR ELEVATION INTERVAL
- 1.0' CONTOUR ELEVATION INTERVAL
- DRAINAGE ARROW
- SILT FENCE / BIOROLL - GRADING LIMIT
- INLET PROTECTION
- STABILIZED CONSTRUCTION ENTRANCE
- EROSION CONTROL BLANKET

Know what's **below.** **Call** before you dig.

1" = 20'-0"
10'-0" 0 20'-0"
8/26/2020 3:49:56 PM


CivilSite GROUP
Civil Engineering • Surveying • Landscape Architecture
4931 W. 35th Street, Suite 200
St. Louis Park, MN 55416
civilsitegroup.com 612-615-0060


PROJECT
# 8525-8545 Penn Avenue
Bloomington, Minnesota

**Penn Lake CityHomes LLC**
Bloomington, Minnesota

I HEREBY CERTIFY THAT THIS PLAN, SPECIFICATION, OR REPORT WAS PREPARED BY ME OR UNDER MY DIRECT SUPERVISION AND THAT I AM A DULY LICENSED PROFESSIONAL ENGINEER UNDER THE LAWS OF THE STATE OF MINNESOTA.

Matthew R. Pavek

DATE 08.05.20 LICENSE NO. 44263

ISSUE/SUBMITTAL SUMMARY

| DATE | DESCRIPTION |
|---|---|
| 06.17.20 | CITY SUBMITTAL |
| 06.08.20 | CITY SUBMITTAL |
| 06.26.20 | CITY RESUBMITTAL |

DRAWN BY: kit REVIEWED BY: kit
PROJECT NUMBER: 19239

REVISION SUMMARY

| DATE | DESCRIPTION |
|---|---|

SWPPP - EXISTING CONDITIONS

# SW1.0

© COPYRIGHT CIVIL SITE GROUP INC.

# CASE #PL2020-133

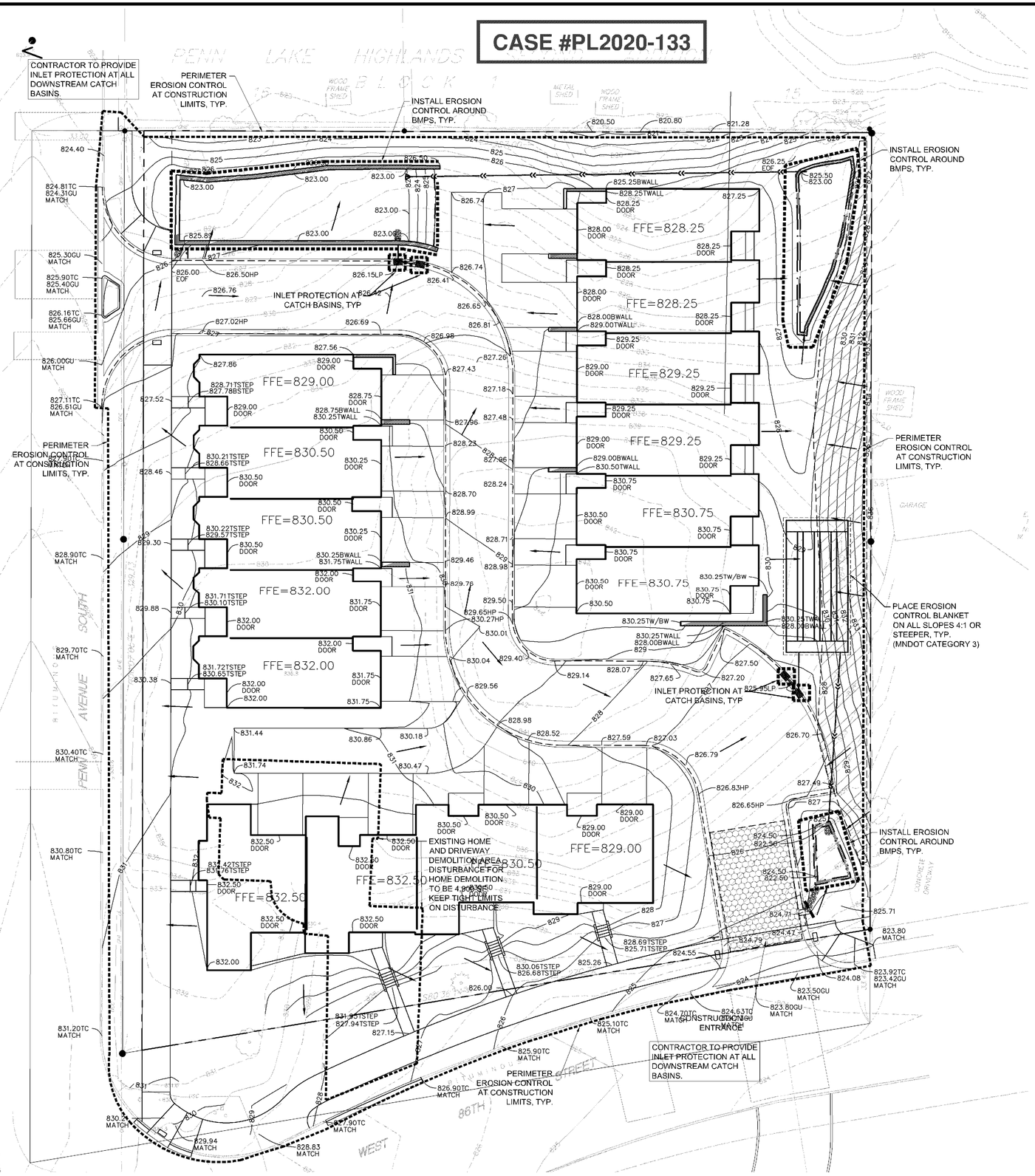


## SWPPP NOTES:

1. THIS PROJECT IS GREATER THAN ONE ACRE AND WILL REQUIRE AN MPCA NPDES PERMIT. CONTRACTOR IS RESPONSIBLE FOR OBTAINING ANY EROSION CONTROL PERMITS REQUIRED BY THE CITY.

2. SEE SHEETS SW1.0 - SW1.5 FOR ALL EROSION CONTROL NOTES, DESCRIPTIONS, AND PRACTICES.

3. SEE GRADING PLAN FOR ADDITIONAL GRADING AND EROSION CONTROL NOTES.

4. CONTRACTOR IS RESPONSIBLE FOR SWPPP IMPLEMENTATION, INSPECTIONS, AND COMPLIANCE WITH NPDES PERMIT.

## CITY OF BLOOMINGTON EROSION CONTROL NOTES:

1. ALL CONSTRUCTION AND POST-CONSTRUCTION PARKING AND STORAGE OF EQUIPMENT AND MATERIALS MUST BE ON-SITE. USE OF PUBLIC STREETS FOR PRIVATE CONSTRUCTION PARKING, LOADING/UNLOADING, AND STORAGE WILL NOT BE ALLOWED.

ALL SPECIFIED EROSION AND SEDIMENT CONTROL PRACTICES, AND MEASURES CONTAINED IN THIS SWPPP ARE THE MINIMUM REQUIREMENTS. ADDITIONAL PRACTICES MAY BE REQUIRED DURING THE COURSE OF CONSTRUCTION.

## LEGEND:

- EX. 1' CONTOUR ELEVATION INTERVAL
- 1.0' CONTOUR ELEVATION INTERVAL
- DRAINAGE ARROW
- SILT FENCE / BIOROLL - GRADING LIMIT
- INLET PROTECTION
- STABILIZED CONSTRUCTION ENTRANCE
- EROSION CONTROL BLANKET

Know what's **below.** **Call** before you dig.

1" = 20'-0"
10'-0" 0 20'-0"
8/20/2020 3:50:07 PM


CivilSite GROUP
Civil Engineering • Surveying • Landscape Architecture
4931 W. 35th Street, Suite 200
St. Louis Park, MN 55416
civilsitegroup.com 612-615-0060


PROJECT
**8525-8545 Penn Avenue**
Bloomington, Minnesota

**Penn Lake CityHomes LLC**
Bloomington, Minnesota

I HEREBY CERTIFY THAT THIS PLAN, SPECIFICATION, OR REPORT WAS PREPARED BY ME OR UNDER MY DIRECT SUPERVISION AND THAT I AM A DULY LICENSED PROFESSIONAL ENGINEER UNDER THE LAWS OF THE STATE OF MINNESOTA.

Matthew R. Pavek
DATE 08.05.20 LICENSE NO. 44263

ISSUE/SUBMITTAL SUMMARY

| DATE | DESCRIPTION |
|---|---|
| 06.17.20 | CITY SUBMITTAL |
| 06.08.20 | CITY SUBMITTAL |
| 08.28.20 | CITY RESUBMITTAL |

DRAWN BY: kit REVIEWED BY: kit
PROJECT NUMBER: 19239

REVISION SUMMARY

| DATE | DESCRIPTION |
|---|---|

SWPPP - PROPOSED CONDITIONS

SW1.1

© COPYRIGHT CIVIL SITE GROUP INC

**CASE #PL2020-133**

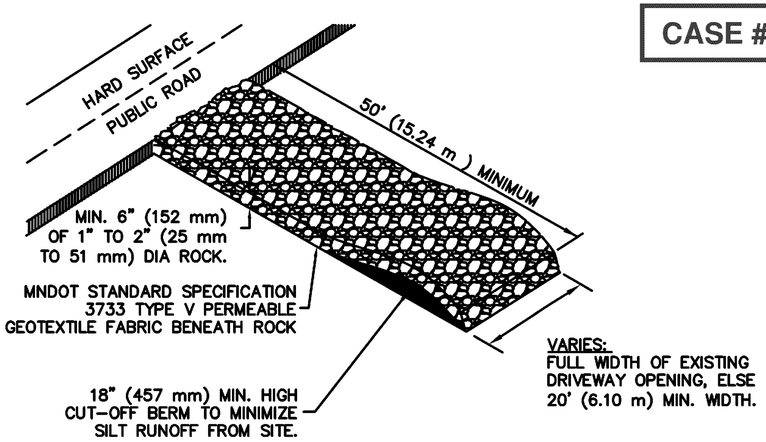


600 – ROCK CONSTRUCTION ENTRANCE AT ACCESS ROADS
600 – Rock Const. Ent.dwg 5/2015

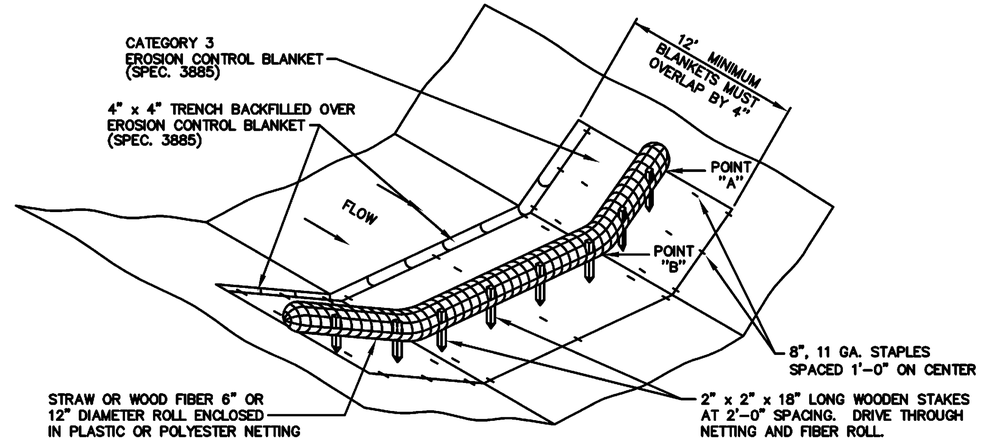


POINT "A" MUST BE HIGHER THAN POINT "B" TO ENSURE THAT WATER FLOWS OVER THE DIKE AND NOT AROUND THE ENDS.

610 – BIOROLL BLANKET SYSTEM ( TYPE 3 SPEC. 3889 )
610 – Bioroll.dwg 5/2015

NOTES:
- PLACE BOTTOM EDGE OF FENCE INTO 6" (153 mm) DEEP TRENCH AND BACKFILLED IMMEDIATELY.
- POSTS SHALL BE:
  - 4' (1.22 m) ON CENTER
  - 2" (50.8 mm) X 2" (50.8 mm) HARDWOOD, PINE OR STEEL FENCE POSTS. MINIMUM LENGTH 4.5'
  - DRIVEN 2' (0.61 m) INTO THE GROUND.

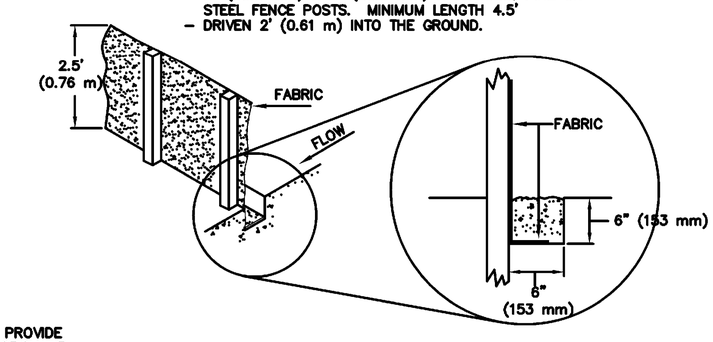


609 – EROSION CONTROL FENCE
609 – Silt Fen (STANDARD).dwg 5/2015

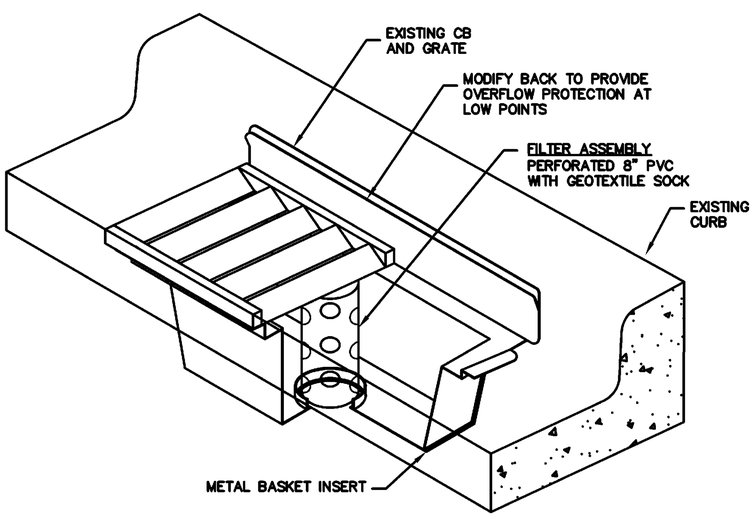


601 – INLET PROTECTION, METAL BASKET TYPE
601 – Wimco (CB).dwg 5/2015

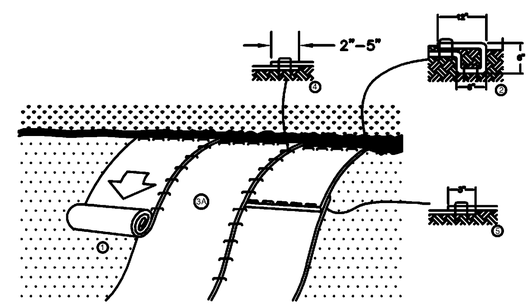


1. PREPARE SOIL BEFORE INSTALLING BLANKETS, INCLUDING ANY NECESSARY APPLICATION OF LIME, FERTILIZER, AND SEED. NOTE: WHEN USING CELL-O-SEED DO NOT SEED PREPARED AREA. CELL-O-SEED MUST BE INSTALLED WITH PAPER SIDE DOWN.
2. BEGIN AT THE TOP OF THE SLOPE BY ANCHORING THE BLANKET IN A 6" (15cm) DEEP X 6" (15cm) WIDE TRENCH WITH APPROXIMATELY 12" (30cm) OF BLANKET EXTENDED BEYOND THE UP-SLOPE PORTION OF THE TRENCH. ANCHOR THE BLANKET WITH A ROW OF STAPLES/STAKES APPROXIMATELY 12" (30cm) APART IN THE BOTTOM OF THE TRENCH. BACKFILL AND COMPACT THE TRENCH AFTER STAPLING. APPLY SEED TO COMPACTED SOIL AND FOLD REMAINING 12" (30cm) PORTION OF BLANKET BACK OVER SEED AND COMPACTED SOIL. SECURE BLANKET OVER COMPACTED SOIL WITH A ROW OF STAPLES/STAKES SPACED APPROXIMATELY 12" (30cm) APART ACROSS THE WIDTH OF THE BLANKET.
3. ROLL THE BLANKETS (A.) DOWN OR (B.) HORIZONTALLY ACROSS THE SLOPE. BLANKETS WILL UNROLL WITH APPROPRIATE SIDE AGAINST THE SOIL SURFACE. ALL BLANKETS MUST BE SECURELY FASTENED TO SOIL SURFACE BY PLACING STAPLES/STAKES IN APPROPRIATE LOCATIONS AS SHOWN IN THE STAPLE PATTERN GUIDE. WHEN USING OPTIONAL DOT SYSTEM , STAPLES/STAKES SHOULD BE PLACED THROUGH EACH OF THE COLORED DOTS CORRESPONDING TO THE APPROPRIATE STAPLE PATTERN.
4. THE EDGES OF PARALLEL BLANKETS MUST BE STAPLED WITH APPROXIMATELY 2"-5" (5cm-12.5cm) OVERLAP DEPENDING ON BLANKET TYPE. TO ENSURE PROPER SEAM ALIGNMENT, PLACE THE EDGE OF THE OVERLAPPING BLANKET (BLANKET BEING INSTALLED ON TOP) EVEN WITH THE COLORED SEAM STITCH ON THE PREVIOUSLY INSTALLED BLANKET.
5. CONSECUTIVE BLANKETS SPLICED DOWN THE SLOPE MUST BE PLACED END OVER END (SHINGLE STYLE) WITH AN APPROXIMATE 3" (7.5cm) OVERLAP. STAPLE THROUGH OVERLAPPED AREA, APPROXIMATELY 12" (30cm) APART ACROSS ENTIRE BLANKET WIDTH.
6. FOLLOW MANUFACTURER'S RECOMMENDED STAPLE PATTERN, FOR THE SLOPE FOR THE SPECIFIED BLANKET.

NOTE:
IN LOOSE SOIL CONDITIONS, THE USE OF STAPLE OR STAKE LENGTHS GREATER THAN 6" (15cm) MAY BE NECESSARY TO PROPERLY SECURE THE BLANKETS.

611 – STANDARD STAPLE PATTERN
611 – Std Staple Pattern.dwg 5/2015

8/26/2020 3:50:16 PM


CivilSite GROUP
Civil Engineering • Surveying • Landscape Architecture
4931 W. 35th Street, Suite 200
St. Louis Park, MN 55416
civilsitegroup.com 612-615-0060


PROJECT
**8525-8545 Penn Avenue**
Bloomington, Minnesota

**Penn Lake CityHomes LLC**
Bloomington, Minnesota

I HEREBY CERTIFY THAT THIS PLAN, SPECIFICATION, OR REPORT WAS PREPARED BY ME OR UNDER MY DIRECT SUPERVISION AND THAT I AM A DULY LICENSED PROFESSIONAL ENGINEER UNDER THE LAWS OF THE STATE OF MINNESOTA.

Matthew R. Pavek
DATE 08.05.20 LICENSE NO. 44263

ISSUE/SUBMITTAL SUMMARY

| DATE | DESCRIPTION |
|---|---|
| 06.17.20 | CITY SUBMITTAL |
| 06.05.20 | CITY SUBMITTAL |
| 06.26.20 | CITY RESUBMITTAL |

DRAWN BY: klt REVIEWED BY: klt
PROJECT NUMBER: 19239

REVISION SUMMARY

| DATE | DESCRIPTION |
|---|---|

SWPPP - DETAILS

SW1.2

© COPYRIGHT CIVIL SITE GROUP INC.

# GENERAL SWPPP REQUIREMENTS AND NOTES:

THE CONTRACTOR AND ALL SUBCONTRACTORS INVOLVED WITH A CONSTRUCTION ACTIVITY THAT DISTURBS SITE SOIL OR WHO IMPLEMENT A POLLUTANT CONTROL MEASURE IDENTIFIED IN THE STORM WATER POLLUTION PREVENTION PLAN (SWPPP) MUST COMPLY WITH THE REQUIREMENTS OF THE NATIONAL POLLUTION DISCHARGE ELIMINATION SYSTEM (NPDES) GENERAL PERMIT (DATED AUGUST 1, 2018 # MNR100001) AND ANY LOCAL GOVERNING AGENCY HAVING JURISDICTION CONCERNING EROSION AND SEDIMENTATION CONTROL.

## STORMWATER DISCHARGE DESIGN REQUIREMENTS

### SWPPP

THE NATURE OF THIS PROJECT WILL BE CONSISTENT WITH WHAT IS REPRESENTED IN THIS SET OF CONSTRUCTION PLANS AND SPECIFICATIONS. SEE THE SWPPP PLAN SHEETS AND SWPPP NARRATIVE (ATTACHMENT A: CONSTRUCTION SWPPP TEMPLATE) FOR ADDITIONAL SITE SPECIFIC SWPPP INFORMATION. THE PLANS SHOW LOCATIONS AND TYPES OF ALL TEMPORARY AND PERMANENT EROSION PREVENTION AND SEDIMENT CONTROL BMP'S. STANDARD DETAILS ARE ATTACHED TO THIS SWPPP DOCUMENT.

THE INTENDED SEQUENCING OF MAJOR CONSTRUCTION ACTIVITIES IS AS FOLLOWS:
1. INSTALL STABILIZED ROCK CONSTRUCTION ENTRANCE
2. INSTALLATION OF SILT FENCE AROUND SITE
3. INSTALLATION OF INLET PROTECTION
4. INSTALL ORANGE CONSTRUCTION FENCING AROUND INFILTRATION AREAS.
5. CLEAR AND GRUB FOR TEMPORARY SEDIMENT BASIN / POND INSTALL
6. CONSTRUCT TEMPORARY SEDIMENT BASIN / POND (SECTION 14)
7. CLEAR AND GRUB REMAINDER OF SITE
8. STRIP AND STOCKPILE TOPSOIL
9. ROUGH GRADING OF SITE
10. STABILIZE DENUDED AREAS AND STOCKPILES
11. INSTALL SANITARY SEWER, WATER MAIN STORM SEWER AND SERVICES
12. INSTALL SILT FENCE / INLET PROTECTION AROUND CB'S
13. INSTALL STREET SECTION
14. INSTALL CURB AND GUTTER
15. BITUMINOUS ON STREETS
16. FINAL GRADE BOULEVARD, INSTALL SEED AND MULCH
17. REMOVE ACCUMULATED SEDIMENT FROM BASIN / POND
18. FINAL GRADE POND / INFILTRATION BASINS (DO NOT COMPACT SOILS IN INFILTRATION AREAS.)
19. WHEN ALL CONSTRUCTION ACTIVITY IS COMPLETE AND THE SITE IS STABILIZED BY EITHER SEED OR SOD/LANDSCAPING, REMOVE SILT FENCE AND RESEED ANY AREAS DISTURBED BY THE REMOVAL.

### RECORDS RETENTION:

THE SWPPP (ORIGINAL OR COPIES) INCLUDING, ALL CHANGES TO IT, AND INSPECTIONS AND MAINTENANCE RECORDS MUST BE KEPT AT THE SITE DURING CONSTRUCTION BY THE PERMITTEE WHO HAS OPERATIONAL CONTROL OF THAT PORTION OF THE SITE. THE SWPPP CAN BE KEPT IN EITHER THE FIELD OFFICE OR IN AN ON SITE VEHICLE DURING NORMAL WORKING HOURS.

ALL OWNER(S) MUST KEEP THE SWPPP, ALONG WITH THE FOLLOWING ADDITIONAL RECORDS, ON FILE FOR THREE (3) YEARS AFTER SUBMITTAL OF THE NOT AS OUTLINED IN SECTION 4. THIS DOES NOT INCLUDE ANY RECORDS AFTER SUBMITTAL OF THE NOT.

1. THE FINAL SWPPP;
2. ANY OTHER STORMWATER RELATED PERMITS REQUIRED FOR THE PROJECT;
3. RECORDS OF ALL INSPECTION AND MAINTENANCE CONDUCTED DURING CONSTRUCTION (SEE SECTION 11, INSPECTIONS AND MAINTENANCE);
4. ALL PERMANENT OPERATION AND MAINTENANCE AGREEMENTS THAT HAVE BEEN IMPLEMENTED, INCLUDING ALL RIGHT OF WAY, CONTRACTS, COVENANTS AND OTHER BINDING REQUIREMENTS REGARDING PERPETUAL MAINTENANCE; AND
5. ALL REQUIRED CALCULATIONS FOR DESIGN OF THE TEMPORARY AND PERMANENT STORMWATER MANAGEMENT SYSTEMS.

### SWPPP IMPLEMENTATION RESPONSIBILITIES:

1. THE OWNER AND CONTRACTOR ARE PERMITTEE(S) AS IDENTIFIED BY THE NPDES PERMIT.
2. CONTRACTOR SHALL BE RESPONSIBLE FOR ALL ON-SITE IMPLEMENTATION OF THE SWPPP, INCLUDING THE ACTIVITIES OF ALL OF THE CONTRACTOR'S SUBCONTRACTORS.
3. CONTRACTOR SHALL PROVIDE A PERSON(S) KNOWLEDGEABLE AND EXPERIENCED IN THE APPLICATION OF EROSION PREVENTION AND SEDIMENT CONTROL BMPS TO OVERSEE ALL INSTALLATION AND MAINTENANCE OF BMPS AND IMPLEMENTATION OF THE SWPPP.
4. CONTRACTOR SHALL PROVIDE PERSON(S) MEETING THE TRAINING REQUIREMENTS OF THE NPDES PERMIT TO CONDUCT INSPECTION AND MAINTENANCE OF ALL EROSION PREVENTION AND SEDIMENT CONTROL BMPS IN ACCORDANCE WITH THE REQUIREMENTS OF THE PERMIT. ONE OF THESE INDIVIDUAL(S) MUST BE AVAILABLE FOR AN ONSITE INSPECTION WITHIN 72 HOURS UPON REQUEST BY MPCA. CONTRACTOR SHALL PROVIDE TRAINING DOCUMENTATION FOR THESE INDIVIDUAL(S) AS REQUIRED BY THE NPDES PERMIT. THIS TRAINING DOCUMENTATION SHALL BE RECORDED IN OR WITH THE SWPPP BEFORE THE START OF CONSTRUCTION OR AS SOON AS THE PERSONNEL FOR THE PROJECT HAVE BEEN DETERMINED. DOCUMENTATION SHALL INCLUDE:
   - 4.1. NAMES OF THE PERSONNEL ASSOCIATED WITH THE PROJECT THAT ARE REQUIRED TO BE TRAINED PER SECTION 21 OF THE PERMIT.
   - 4.2. DATES OF TRAINING AND NAME OF INSTRUCTOR AND ENTITY PROVIDING TRAINING.
   - 4.3. CONTENT OF TRAINING COURSE OR WORKSHOP INCLUDING THE NUMBER OF HOURS OF TRAINING.
5. FOLLOWING FINAL STABILIZATION AND THE TERMINATION OF COVERAGE FOR THE NPDES PERMIT, THE OWNER IS EXPECTED TO FURNISH LONG TERM OPERATION AND MAINTENANCE (O & M) OF THE PERMANENT STORM WATER MANAGEMENT SYSTEM.

## CONSTRUCTION ACTIVITY REQUIREMENTS

### SWPPP AMENDMENTS (SECTION 6):

1. ONE OF THE INDIVIDUALS DESCRIBED IN ITEM 21.2.A OR ITEM 21.2.B OR ANOTHER QUALIFIED INDIVIDUAL MUST COMPLETE ALL SWPPP CHANGES. CHANGES INVOLVING THE USE OF A LESS STRINGENT BMP MUST INCLUDE A JUSTIFICATION DESCRIBING HOW THE REPLACEMENT BMP IS EFFECTIVE FOR THE SITE CHARACTERISTICS.
2. PERMITTEES MUST AMEND THE SWPPP TO INCLUDE ADDITIONAL OR MODIFIED BMPS AS NECESSARY TO CORRECT PROBLEMS IDENTIFIED OR ADDRESS SITUATIONS WHENEVER THERE IS A CHANGE IN DESIGN, CONSTRUCTION, OPERATION, MAINTENANCE, WEATHER OR SEASONAL CONDITIONS HAVING A SIGNIFICANT EFFECT ON THE DISCHARGE OF POLLUTANTS TO SURFACE WATERS OR GROUNDWATER.
3. PERMITTEES MUST AMEND THE SWPPP TO INCLUDE ADDITIONAL OR MODIFIED BMPS AS NECESSARY TO CORRECT PROBLEMS IDENTIFIED OR ADDRESS SITUATIONS WHENEVER INSPECTIONS OR INVESTIGATIONS BY THE SITE OWNER OR OPERATOR, USEPA OR MPCA OFFICIALS INDICATE THE SWPPP IS NOT EFFECTIVE IN ELIMINATING OR SIGNIFICANTLY MINIMIZING THE DISCHARGE OF POLLUTANTS TO SURFACE WATERS OR GROUNDWATER OR THE DISCHARGES ARE CAUSING WATER QUALITY STANDARD EXCEEDANCES (E.G., NUISANCE CONDITIONS AS DEFINED IN MINN. R. 7050.0210, SUBP. 2) OR THE SWPPP IS NOT CONSISTENT WITH THE OBJECTIVES OF A USEPA APPROVED TMDL.

### BMP SELECTION AND INSTALLATION (SECTION 7):

1. PERMITTEES MUST SELECT, INSTALL, AND MAINTAIN THE BMPS IDENTIFIED IN THE SWPPP AND IN THIS PERMIT IN AN APPROPRIATE AND FUNCTIONAL MANNER AND IN ACCORDANCE WITH RELEVANT MANUFACTURER SPECIFICATIONS AND ACCEPTED ENGINEERING PRACTICES.

### EROSION PREVENTION (SECTION 8):

1. BEFORE WORK BEGINS, PERMITTEES MUST DELINEATE THE LOCATION OF AREAS NOT TO BE DISTURBED.
2. PERMITTEES MUST MINIMIZE THE NEED FOR DISTURBANCE OF PORTIONS OF THE PROJECT WITH STEEP SLOPES. WHEN STEEP SLOPES MUST BE DISTURBED, PERMITTEES MUST USE TECHNIQUES SUCH AS PHASING AND STABILIZATION PRACTICES DESIGNED FOR STEEP SLOPES (E.G., SLOPE DRAINING AND TERRACING).
3. PERMITTEES MUST STABILIZE ALL EXPOSED SOIL AREAS, INCLUDING STOCKPILES. STABILIZATION MUST BE INITIATED IMMEDIATELY TO LIMIT SOIL EROSION WHEN CONSTRUCTION ACTIVITY HAS PERMANENTLY OR TEMPORARILY CEASED ON ANY PORTION OF THE SITE AND WILL NOT RESUME FOR A PERIOD EXCEEDING 14 CALENDAR DAYS. STABILIZATION MUST BE COMPLETED NO LATER THAN 14 CALENDAR DAYS AFTER THE CONSTRUCTION ACTIVITY HAS CEASED. STABILIZATION IS NOT REQUIRED ON CONSTRUCTED BASE COMPONENTS OF ROADS, PARKING LOTS AND SIMILAR SURFACES. STABILIZATION IS NOT REQUIRED ON TEMPORARY STOCKPILES WITHOUT SIGNIFICANT SILT, CLAY OR ORGANIC COMPONENTS (E.G., CLEAN AGGREGATE STOCKPILES, DEMOLITION CONCRETE STOCKPILES, SAND STOCKPILES) BUT PERMITTEES MUST PROVIDE SEDIMENT CONTROLS AT THE BASE OF THE STOCKPILE.
4. FOR PUBLIC WATERS THAT THE MINNESOTA DNR HAS PROMULGATED "WORK IN WATER RESTRICTIONS" DURING SPECIFIED FISH SPAWNING TIME FRAMES, PERMITTEES MUST COMPLETE STABILIZATION OF ALL EXPOSED SOIL AREAS WITHIN 200 FEET OF THE WATER'S EDGE, AND THAT DRAIN TO THESE WATERS, WITHIN 24 HOURS DURING THE RESTRICTION PERIOD.
5. PERMITTEES MUST STABILIZE THE NORMAL WETTED PERIMETER OF THE LAST 200 LINEAR FEET OF TEMPORARY OR PERMANENT DRAINAGE DITCHES OR SWALES THAT DRAIN WATER FROM THE SITE WITHIN 24 HOURS AFTER CONNECTING TO A SURFACE WATER OR PROPERTY EDGE. PERMITTEES MUST COMPLETE STABILIZATION OF REMAINING PORTIONS OF TEMPORARY OR PERMANENT DITCHES OR SWALES WITHIN 14 CALENDAR DAYS AFTER CONNECTING TO A SURFACE WATER OR PROPERTY EDGE AND CONSTRUCTION IN THAT PORTION OF THE DITCH TEMPORARILY OR PERMANENTLY CEASES.
6. TEMPORARY OR PERMANENT DITCHES OR SWALES BEING USED AS A SEDIMENT CONTAINMENT SYSTEM DURING CONSTRUCTION (WITH PROPERLY DESIGNED ROCK-DITCH CHECKS, BIO ROLLS, SILT DIKES, ETC.) DO NOT NEED TO BE STABILIZED. PERMITTEES MUST STABILIZE THESE AREAS WITHIN 24 HOURS AFTER THEIR USE AS A SEDIMENT CONTAINMENT SYSTEM CEASES
7. PERMITTEES MUST NOT USE MULCH, HYDROMULCH, TACKIFIER, POLYACRYLAMIDE OR SIMILAR EROSION PREVENTION PRACTICES WITHIN ANY PORTION OF THE NORMAL WETTED PERIMETER OF A TEMPORARY OR PERMANENT DRAINAGE DITCH OR SWALE SECTION WITH A CONTINUOUS SLOPE OF GREATER THAN 2 PERCENT.
8. PERMITTEES MUST PROVIDE TEMPORARY OR PERMANENT ENERGY DISSIPATION AT ALL PIPE OUTLETS WITHIN 24 HOURS AFTER CONNECTION TO A SURFACE WATER OR PERMANENT STORMWATER TREATMENT SYSTEM.
9. PERMITTEES MUST NOT DISTURB MORE LAND (I.E., PHASING) THAN CAN BE EFFECTIVELY INSPECTED AND MAINTAINED IN ACCORDANCE WITH SECTION 11.

### SEDIMENT CONTROL (SECTION 9):

1. PERMITTEES MUST ESTABLISH SEDIMENT CONTROL BMPS ON ALL DOWNGRADIENT PERIMETERS OF THE SITE AND DOWNGRADIENT AREAS OF THE SITE THAT DRAIN TO ANY SURFACE WATER, INCLUDING CURB AND GUTTER SYSTEMS. PERMITTEES MUST LOCATE SEDIMENT CONTROL PRACTICES UPGRADIENT OF ANY BUFFER ZONES. PERMITTEES MUST INSTALL SEDIMENT CONTROL PRACTICES BEFORE ANY UPGRADIENT LAND-DISTURBING ACTIVITIES BEGIN AND MUST KEEP THE SEDIMENT CONTROL PRACTICES IN PLACE UNTIL THEY ESTABLISH PERMANENT COVER.
2. IF DOWNGRADIENT SEDIMENT CONTROLS ARE OVERLOADED, BASED ON FREQUENT FAILURE OR EXCESSIVE MAINTENANCE REQUIREMENTS, PERMITTEES MUST INSTALL ADDITIONAL UPGRADIENT SEDIMENT CONTROL PRACTICES OR REDUNDANT BMPS TO ELIMINATE THE OVERLOADING AND AMEND THE SWPPP TO IDENTIFY THESE ADDITIONAL PRACTICES AS REQUIRED IN ITEM 6.3.
3. TEMPORARY OR PERMANENT DRAINAGE DITCHES AND SEDIMENT BASINS DESIGNED AS PART OF A SEDIMENT CONTAINMENT SYSTEM (E.G., DITCHES WITH ROCK-CHECK DAMS) REQUIRE SEDIMENT CONTROL PRACTICES ONLY AS APPROPRIATE FOR SITE CONDITIONS.
4. A FLOATING SILT CURTAIN PLACED IN THE WATER IS NOT A SEDIMENT CONTROL BMP TO SATISFY ITEM 9.2 EXCEPT WHEN WORKING ON A SHORELINE OR BELOW THE WATERLINE. IMMEDIATELY AFTER THE SHORT TERM CONSTRUCTION ACTIVITY (E.G., INSTALLATION OF RIP RAP ALONG THE SHORELINE) IN THAT AREA IS COMPLETE, PERMITTEES MUST INSTALL AN UPLAND PERIMETER CONTROL PRACTICE IF EXPOSED SOILS STILL DRAIN TO A SURFACE WATER.
5. PERMITTEES MUST RE-INSTALL ALL SEDIMENT CONTROL PRACTICES ADJUSTED OR REMOVED TO ACCOMMODATE SHORT-TERM ACTIVITIES SUCH AS CLEARING OR GRUBBING, OR PASSAGE OF VEHICLES, IMMEDIATELY AFTER THE SHORT-TERM ACTIVITY IS COMPLETED. PERMITTEES MUST RE-INSTALL SEDIMENT CONTROL PRACTICES BEFORE THE NEXT PRECIPITATION EVENT EVEN IF THE SHORT-TERM ACTIVITY IS NOT COMPLETE.
6. PERMITTEES MUST PROTECT ALL STORM DRAIN INLETS USING APPROPRIATE BMPS DURING CONSTRUCTION UNTIL THEY ESTABLISH PERMANENT COVER ON ALL AREAS WITH POTENTIAL FOR DISCHARGING TO THE INLET.
7. PERMITTEES MAY REMOVE INLET PROTECTION FOR A PARTICULAR INLET IF A SPECIFIC SAFETY CONCERN (E.G. STREET FLOODING/FREEZING) IS IDENTIFIED BY THE PERMITTEES OR THE JURISDICTIONAL AUTHORITY (E.G., CITY/COUNTY/TOWNSHIP/MINNESOTA DEPARTMENT OF TRANSPORTATION ENGINEER). PERMITTEES MUST DOCUMENT THE NEED FOR REMOVAL IN THE SWPPP.
8. PERMITTEES MUST PROVIDE SILT FENCE OR OTHER EFFECTIVE SEDIMENT CONTROLS AT THE BASE OF STOCKPILES ON THE DOWNGRADIENT PERIMETER.
9. PERMITTEES MUST LOCATE STOCKPILES OUTSIDE OF NATURAL BUFFERS OR SURFACE WATERS, INCLUDING STORMWATER CONVEYANCES SUCH AS CURB AND GUTTER SYSTEMS UNLESS THERE IS A BYPASS IN PLACE FOR THE STORMWATER.
10. PERMITTEES MUST INSTALL A VEHICLE TRACKING BMP TO MINIMIZE THE TRACK OUT OF SEDIMENT FROM THE CONSTRUCTION SITE OR ONTO PAVED ROADS WITHIN THE SITE.
11. PERMITTEES MUST USE STREET SWEEPING IF VEHICLE TRACKING BMPS ARE NOT ADEQUATE TO PREVENT SEDIMENT TRACKING ONTO THE STREET.
12. PERMITTEES MUST INSTALL TEMPORARY SEDIMENT BASINS AS REQUIRED IN SECTION 14.
13. IN ANY AREAS OF THE SITE WHERE FINAL VEGETATIVE STABILIZATION WILL OCCUR, PERMITTEES MUST RESTRICT VEHICLE AND EQUIPMENT USE TO MINIMIZE SOIL COMPACTION.
14. PERMITTEES MUST PRESERVE TOPSOIL ON THE SITE, UNLESS INFEASIBLE.
15. PERMITTEES MUST DIRECT DISCHARGES FROM BMPS TO VEGETATED AREAS UNLESS INFEASIBLE.
16. PERMITTEES MUST PRESERVE A 50 FOOT NATURAL BUFFER OR, IF A BUFFER IS INFEASIBLE ON THE SITE, PROVIDE REDUNDANT (DOUBLE) PERIMETER SEDIMENT CONTROLS WHEN A SURFACE WATER IS LOCATED WITHIN 50 FEET OF THE PROJECT'S EARTH DISTURBANCES AND STORMWATER FLOWS TO THE SURFACE WATER. PERMITTEES MUST INSTALL PERIMETER SEDIMENT CONTROLS AT LEAST 5 FEET APART UNLESS LIMITED BY LACK OF AVAILABLE SPACE. NATURAL BUFFERS ARE NOT REQUIRED ADJACENT TO ROAD DITCHES, JUDICIAL DITCHES, COUNTY DITCHES, STORMWATER CONVEYANCE CHANNELS, STORM DRAIN INLETS, AND SEDIMENT BASINS. IF PRESERVING THE BUFFER IS INFEASIBLE, PERMITTEES MUST DOCUMENT THE REASONS IN THE SWPPP. SHEET PILING IS A REDUNDANT PERIMETER CONTROL IF INSTALLED IN A MANNER THAT RETAINS ALL STORMWATER.
17. PERMITTEES MUST USE POLYMERS, FLOCCULANTS, OR OTHER SEDIMENTATION TREATMENT CHEMICALS IN ACCORDANCE WITH ACCEPTED ENGINEERING PRACTICES, DOSING SPECIFICATIONS AND SEDIMENT REMOVAL DESIGN SPECIFICATIONS PROVIDED BY THE MANUFACTURER OR SUPPLIER. THE PERMITTEES MUST USE CONVENTIONAL EROSION AND SEDIMENT CONTROLS PRIOR TO CHEMICAL ADDITION AND MUST DIRECT TREATED STORMWATER TO A SEDIMENT CONTROL SYSTEM FOR FILTRATION OR SETTLEMENT OF THE FLOC PRIOR TO DISCHARGE.

### DEWATERING AND BASIN DRAINING (SECTION 10):

1. PERMITTEES MUST DISCHARGE TURBID OR SEDIMENT-LADEN WATERS RELATED TO DEWATERING OR BASIN DRAINING (E.G., PUMPED DISCHARGES, TRENCH/DITCH CUTS FOR DRAINAGE) TO A TEMPORARY OR PERMANENT SEDIMENT BASIN ON THE PROJECT SITE UNLESS INFEASIBLE. PERMITTEES MAY DEWATER TO SURFACE WATERS IF THEY VISUALLY CHECK TO ENSURE ADEQUATE TREATMENT HAS BEEN OBTAINED AND NUISANCE CONDITIONS (SEE MINN. R. 7050.0210, SUBP. 2) WILL NOT RESULT FROM THE DISCHARGE. IF PERMITTEES CANNOT DISCHARGE THE WATER TO A SEDIMENTATION BASIN PRIOR TO ENTERING A SURFACE WATER, PERMITTEES MUST TREAT IT WITH APPROPRIATE BMPS SUCH THAT THE DISCHARGE DOES NOT ADVERSELY AFFECT THE SURFACE WATER OR DOWNSTREAM PROPERTIES.
2. IF PERMITTEES MUST DISCHARGE WATER CONTAINING OIL OR GREASE, THEY MUST USE AN OIL-WATER SEPARATOR OR SUITABLE FILTRATION DEVICE (E.G., CARTRIDGE FILTERS, ABSORBENTS PADS) PRIOR TO DISCHARGE.
3. PERMITTEES MUST DISCHARGE ALL WATER FROM DEWATERING OR BASIN-DRAINING ACTIVITIES IN A MANNER THAT DOES NOT CAUSE EROSION OR SCOUR IN THE IMMEDIATE VICINITY OF DISCHARGE POINTS OR INUNDATION OF WETLANDS IN THE IMMEDIATE VICINITY OF DISCHARGE POINTS THAT CAUSES SIGNIFICANT ADVERSE IMPACT TO THE WETLAND.
4. IF PERMITTEES USE FILTERS WITH BACKWASH WATER, THEY MUST HAUL THE BACKWASH WATER AWAY FOR DISPOSAL, RETURN THE BACKWASH WATER TO THE BEGINNING OF THE TREATMENT PROCESS, OR INCORPORATE THE BACKWASH WATER INTO THE SITE IN A MANNER THAT DOES NOT CAUSE EROSION.

### INSPECTIONS AND MAINTENANCE (SECTION 11):

1. PERMITTEES MUST ENSURE A TRAINED PERSON, AS IDENTIFIED IN ITEM 21.2.B, WILL INSPECT THE ENTIRE CONSTRUCTION SITE AT LEAST ONCE EVERY SEVEN (7) DAYS DURING ACTIVE CONSTRUCTION AND WITHIN 24 HOURS AFTER A RAINFALL EVENT GREATER THAN 1/2 INCH IN 24 HOURS.
2. PERMITTEES MUST INSPECT AND MAINTAIN ALL PERMANENT STORMWATER TREATMENT BMPS.
3. PERMITTEES MUST INSPECT ALL EROSION PREVENTION AND SEDIMENT CONTROL BMPS AND POLLUTION PREVENTION MANAGEMENT MEASURES TO ENSURE INTEGRITY AND EFFECTIVENESS. PERMITTEES MUST REPAIR, REPLACE OR SUPPLEMENT ALL NONFUNCTIONAL BMPS WITH FUNCTIONAL BMPS BY THE END OF THE NEXT BUSINESS DAY AFTER DISCOVERY UNLESS ANOTHER TIME FRAME IS SPECIFIED IN ITEM 11.5 OR 11.6. PERMITTEES MAY TAKE ADDITIONAL TIME IF FIELD CONDITIONS PREVENT ACCESS TO THE AREA.
4. DURING EACH INSPECTION, PERMITTEES MUST INSPECT SURFACE WATERS, INCLUDING DRAINAGE DITCHES AND CONVEYANCE SYSTEMS BUT NOT CURB AND GUTTER SYSTEMS, FOR EVIDENCE OF EROSION AND SEDIMENT DEPOSITION. PERMITTEES MUST REMOVE ALL DELTAS AND SEDIMENT DEPOSITED IN SURFACE WATERS, INCLUDING DRAINAGE WAYS, CATCH BASINS, AND OTHER DRAINAGE SYSTEMS AND RESTABILIZE THE AREAS WHERE SEDIMENT REMOVAL RESULTS IN EXPOSED SOIL. PERMITTEES MUST COMPLETE REMOVAL AND STABILIZATION WITHIN SEVEN (7) CALENDAR DAYS OF DISCOVERY UNLESS PRECLUDED BY LEGAL, REGULATORY, OR PHYSICAL ACCESS CONSTRAINTS. PERMITTEES MUST USE ALL REASONABLE EFFORTS TO OBTAIN ACCESS. IF PRECLUDED, REMOVAL AND STABILIZATION MUST TAKE PLACE WITHIN SEVEN (7) DAYS OF OBTAINING ACCESS. PERMITTEES ARE RESPONSIBLE FOR CONTACTING ALL LOCAL, REGIONAL, STATE AND FEDERAL AUTHORITIES AND RECEIVING ANY APPLICABLE PERMITS, PRIOR TO CONDUCTING ANY WORK IN SURFACE WATERS.
5. PERMITTEES MUST INSPECT CONSTRUCTION SITE VEHICLE EXIT LOCATIONS, STREETS AND CURB AND GUTTER SYSTEMS WITHIN AND ADJACENT TO THE PROJECT FOR SEDIMENTATION FROM EROSION OR TRACKED SEDIMENT FROM VEHICLES. PERMITTEES MUST REMOVE SEDIMENT FROM ALL PAVED SURFACES WITHIN ONE (1) CALENDAR DAY OF DISCOVERY OR, IF APPLICABLE, WITHIN A SHORTER TIME TO AVOID A SAFETY HAZARD TO USERS OF PUBLIC STREETS.
6. PERMITTEES MUST REPAIR, REPLACE OR SUPPLEMENT ALL PERIMETER CONTROL DEVICES WHEN THEY BECOME NONFUNCTIONAL OR THE SEDIMENT REACHES 1/2 OF THE HEIGHT OF THE DEVICE.
7. PERMITTEES MUST DRAIN TEMPORARY AND PERMANENT SEDIMENTATION BASINS AND REMOVE THE SEDIMENT WHEN THE DEPTH OF SEDIMENT COLLECTED IN THE BASIN REACHES 1/2 THE STORAGE VOLUME.
8. PERMITTEES MUST ENSURE THAT AT LEAST ONE INDIVIDUAL PRESENT ON THE SITE (OR AVAILABLE TO THE PROJECT SITE IN THREE (3) CALENDAR DAYS) IS TRAINED IN THE JOB DUTIES DESCRIBED IN ITEM 21.2.B.
9. PERMITTEES MAY ADJUST THE INSPECTION SCHEDULE DESCRIBED IN ITEM 11.2 AS FOLLOWS:
   - a. INSPECTIONS OF AREAS WITH PERMANENT COVER CAN BE REDUCED TO ONCE PER MONTH, EVEN IF CONSTRUCTION ACTIVITY CONTINUES ON OTHER PORTIONS OF THE SITE; OR
   - b. WHERE SITES HAVE PERMANENT COVER ON ALL EXPOSED SOIL AND NO CONSTRUCTION ACTIVITY IS OCCURRING ANYWHERE ON THE SITE, INSPECTIONS CAN BE REDUCED TO ONCE PER MONTH AND, AFTER 12 MONTHS, MAY BE SUSPENDED COMPLETELY UNTIL CONSTRUCTION ACTIVITY RESUMES. THE MPCA MAY REQUIRE INSPECTIONS TO RESUME IF CONDITIONS WARRANT; OR
   - c. WHERE CONSTRUCTION ACTIVITY HAS BEEN SUSPENDED DUE TO FROZEN GROUND CONDITIONS, INSPECTIONS MAY BE SUSPENDED. INSPECTIONS MUST RESUME WITHIN 24 HOURS OF RUNOFF OCCURRING, OR UPON RESUMING CONSTRUCTION, WHICHEVER COMES FIRST.
10. PERMITTEES MUST RECORD ALL INSPECTIONS AND MAINTENANCE ACTIVITIES WITHIN 24 HOURS OF BEING CONDUCTED AND THESE RECORDS MUST BE RETAINED WITH THE SWPPP. THESE RECORDS MUST INCLUDE:
    - a. DATE AND TIME OF INSPECTIONS; AND
    - b. NAME OF PERSONS CONDUCTING INSPECTIONS; AND
    - c. ACCURATE FINDINGS OF INSPECTIONS, INCLUDING THE SPECIFIC LOCATION WHERE CORRECTIVE ACTIONS ARE NEEDED; AND
    - d. CORRECTIVE ACTIONS TAKEN (INCLUDING DATES, TIMES, AND PARTY COMPLETING MAINTENANCE ACTIVITIES); AND
    - e. DATE OF ALL RAINFALL EVENTS GREATER THAN 1/2 INCHES IN 24 HOURS, AND THE AMOUNT OF RAINFALL FOR EACH EVENT. PERMITTEES MUST OBTAIN RAINFALL AMOUNTS BY EITHER A PROPERLY MAINTAINED RAIN GAUGE INSTALLED ONSITE, A WEATHER STATION THAT IS WITHIN ONE (1) MILE OF YOUR LOCATION, OR A WEATHER REPORTING SYSTEM THAT PROVIDES SITE SPECIFIC RAINFALL DATA FROM RADAR SUMMARIES; AND
    - f. IF PERMITTEES OBSERVE A DISCHARGE DURING THE INSPECTION, THEY MUST RECORD AND SHOULD PHOTOGRAPH AND DESCRIBE THE LOCATION OF THE DISCHARGE (I.E., COLOR, ODOR, SETTLED OR SUSPENDED SOLIDS, OIL SHEEN, AND OTHER OBVIOUS INDICATORS OF POLLUTANTS); AND
    - g. ANY AMENDMENTS TO THE SWPPP PROPOSED AS A RESULT OF THE INSPECTION MUST BE DOCUMENTED AS REQUIRED IN SECTION 6 WITHIN SEVEN (7) CALENDAR DAYS.

### POLLUTION PREVENTION MANAGEMENT (SECTION 12):

1. PERMITTEES MUST PLACE BUILDING PRODUCTS AND LANDSCAPE MATERIALS UNDER COVER (E.G., PLASTIC SHEETING OR TEMPORARY ROOFS) OR PROTECT THEM BY SIMILARLY EFFECTIVE MEANS DESIGNED TO MINIMIZE CONTACT WITH STORMWATER. PERMITTEES ARE NOT REQUIRED TO COVER OR PROTECT PRODUCTS WHICH ARE EITHER NOT A SOURCE OF CONTAMINATION TO STORMWATER OR ARE DESIGNED TO BE EXPOSED TO STORMWATER.
2. PERMITTEES MUST PLACE PESTICIDES, FERTILIZERS AND TREATMENT CHEMICALS UNDER COVER (E.G., PLASTIC SHEETING OR TEMPORARY ROOFS) OR PROTECT THEM BY SIMILARLY EFFECTIVE MEANS DESIGNED TO MINIMIZE CONTACT WITH STORMWATER.
3. PERMITTEES MUST STORE HAZARDOUS MATERIALS AND TOXIC WASTE, (INCLUDING OIL, DIESEL FUEL, GASOLINE, HYDRAULIC FLUIDS, PAINT SOLVENTS, PETROLEUM-BASED PRODUCTS, WOOD PRESERVATIVES, ADDITIVES, CURING COMPOUNDS, AND ACIDS) IN SEALED CONTAINERS TO PREVENT SPILLS, LEAKS OR OTHER DISCHARGE. STORAGE AND DISPOSAL OF HAZARDOUS WASTE MATERIALS MUST BE IN COMPLIANCE WITH MINN. R. CH. 7045 INCLUDING SECONDARY CONTAINMENT AS APPLICABLE.
4. PERMITTEES MUST PROPERLY STORE, COLLECT AND DISPOSE SOLID WASTE IN COMPLIANCE WITH MINN. R. CH. 7035.
5. PERMITTEES MUST POSITION PORTABLE TOILETS SO THEY ARE SECURE AND WILL NOT TIP OR BE KNOCKED OVER. PERMITTEES MUST PROPERLY DISPOSE SANITARY WASTE IN ACCORDANCE WITH MINN. R. CH. 7041.
6. PERMITTEES MUST TAKE REASONABLE STEPS TO PREVENT THE DISCHARGE OF SPILLED OR LEAKED CHEMICALS, INCLUDING FUEL, FROM ANY AREA WHERE CHEMICALS OR FUEL WILL BE LOADED OR UNLOADED INCLUDING THE USE OF DRIP PANS OR ABSORBENTS UNLESS INFEASIBLE. PERMITTEES MUST ENSURE ADEQUATE SUPPLIES ARE AVAILABLE AT ALL TIMES TO CLEAN UP DISCHARGED MATERIALS AND THAT AN APPROPRIATE DISPOSAL METHOD IS AVAILABLE FOR RECOVERED SPILLED MATERIALS. PERMITTEES MUST REPORT AND CLEAN UP SPILLS IMMEDIATELY AS REQUIRED BY MINN. STAT. 115.061, USING DRY CLEAN UP MEASURES WHERE POSSIBLE.
7. PERMITTEES MUST LIMIT VEHICLE EXTERIOR WASHING AND EQUIPMENT TO A DEFINED AREA OF THE SITE. PERMITTEES MUST CONTAIN RUNOFF FROM THE WASHING AREA IN A SEDIMENT BASIN OR OTHER SIMILARLY EFFECTIVE CONTROLS AND MUST DISPOSE WASTE FROM THE WASHING ACTIVITY PROPERLY. PERMITTEES MUST PROPERLY USE AND STORE SOAPS, DETERGENTS, OR SOLVENTS.
8. PERMITTEES MUST PROVIDE EFFECTIVE CONTAINMENT FOR ALL LIQUID AND SOLID WASTES GENERATED BY WASHOUT OPERATIONS (E.G., CONCRETE, STUCCO, PAINT, FORM RELEASE OILS, CURING COMPOUNDS AND OTHER CONSTRUCTION MATERIALS) RELATED TO THE CONSTRUCTION ACTIVITY. PERMITTEES MUST PREVENT LIQUID AND SOLID WASHOUT WASTES FROM CONTACTING THE GROUND AND MUST DESIGN THE CONTAINMENT SO IT DOES NOT RESULT IN RUNOFF FROM THE WASHOUT OPERATIONS OR AREAS. PERMITTEES MUST PROPERLY DISPOSE LIQUID AND SOLID WASTES IN COMPLIANCE WITH MPCA RULES. PERMITTEES MUST INSTALL A SIGN INDICATING THE LOCATION OF THE WASHOUT FACILITY.

### PERMIT TERMINATION (SECTION 4 AND SECTION 13):

1. PERMITTEES MUST SUBMIT A NOT WITHIN 30 DAYS AFTER ALL TERMINATION CONDITIONS LISTED IN SECTION 13 ARE COMPLETE.
2. PERMITTEES MUST SUBMIT A NOT WITHIN 30 DAYS AFTER SELLING OR OTHERWISE LEGALLY TRANSFERRING THE ENTIRE SITE, INCLUDING PERMIT RESPONSIBILITY FOR ROADS (E.G., STREET SWEEPING) AND STORMWATER INFRASTRUCTURE FINAL CLEAN OUT, OR TRANSFERRING PORTIONS OF A SITE TO ANOTHER PARTY. THE PERMITTEES' COVERAGE UNDER THIS PERMIT TERMINATES AT MIDNIGHT ON THE SUBMISSION DATE OF THE NOT.
3. PERMITTEES MUST COMPLETE ALL CONSTRUCTION ACTIVITY AND MUST INSTALL PERMANENT COVER OVER ALL AREAS PRIOR TO SUBMITTING THE NOT. VEGETATIVE COVER MUST CONSIST OF A UNIFORM PERENNIAL VEGETATION WITH A DENSITY OF 70 PERCENT OF ITS EXPECTED FINAL GROWTH. VEGETATION IS NOT REQUIRED WHERE THE FUNCTION OF A SPECIFIC AREA DICTATES NO VEGETATION, SUCH AS IMPERVIOUS SURFACES OR THE BASE OF A SAND FILTER.
4. PERMITTEES MUST CLEAN THE PERMANENT STORMWATER TREATMENT SYSTEM OF ANY ACCUMULATED SEDIMENT AND MUST ENSURE THE SYSTEM MEETS ALL APPLICABLE REQUIREMENTS IN SECTION 15 THROUGH 19 AND IS OPERATING AS DESIGNED.
5. PERMITTEES MUST REMOVE ALL SEDIMENT FROM CONVEYANCE SYSTEMS PRIOR TO SUBMITTING THE NOT.
6. PERMITTEES MUST REMOVE ALL TEMPORARY SYNTHETIC EROSION PREVENTION AND SEDIMENT CONTROL BMPS PRIOR TO SUBMITTING THE NOT. PERMITTEES MAY LEAVE BMPS DESIGNED TO DECOMPOSE ON-SITE IN PLACE.
7. FOR RESIDENTIAL CONSTRUCTION ONLY, PERMIT COVERAGE TERMINATES ON INDIVIDUAL LOTS IF THE STRUCTURES ARE FINISHED AND TEMPORARY EROSION PREVENTION AND DOWNGRADIENT PERIMETER CONTROL IS COMPLETE, THE RESIDENCE SELLS TO THE HOMEOWNER, AND THE PERMITTEE DISTRIBUTES THE MPCA'S "HOMEOWNER FACT SHEET" TO THE HOMEOWNER.
8. FOR CONSTRUCTION PROJECTS ON AGRICULTURAL LAND (E.G., PIPELINES ACROSS CROPLAND), PERMITTEES MUST RETURN THE DISTURBED LAND TO ITS PRECONSTRUCTION AGRICULTURAL USE PRIOR TO SUBMITTING THE NOT.

### SEED NOTES:

ALL SEED MIXES AND APPLICATION SHALL BE IN ACCORDANCE WITH THE MNDOT SEEDING MANUAL.

GENERAL RECOMMENDATIONS:
THE CONTRACTOR IS RESPONSIBLE TO SALVAGE AND PRESERVE EXISTING TOPSOIL NECESSARY FOR FINAL STABILIZATION AND TO ALSO MINIMIZE COMPACTION IN ALL LANDSCAPE AREAS. IMMEDIATELY BEFORE SEEDING THE SOIL SHALL BE TILLED TO A MINIMUM DEPTH OF 3 INCHES.

### TEMPORARY EROSION CONTROL SEEDING, MULCHING & BLANKET.

SEED
- TEMPORARY SEED SHALL BE MNDOT SEED MIX 21-112 (WINTER WHEAT COVER CROP) FOR WINTER AND 21-111 (OATS COVER CROP) FOR SPRING/SUMMER APPLICATIONS. BOTH SEED MIXES SHALL BE APPLIED AT A SEEDING RATE OF 100 LBS/ACRE.

MULCH
- IMMEDIATELY AFTER SEEDING, WITHIN 24 HOURS, MNDOT TYPE 1 MULCH SHOULD BE APPLIED TO PROTECT AND ENHANCE SEED GERMINATION. MULCH SHALL BE APPLIED AT 90% COVERAGE (2 TONS PER ACRE OF STRAW MULCH)

SLOPES
- 3:1 (HORIZ/VERT.) OR FLATTER MUCH SHALL BE COVERED WITH MULCH
- SLOPES STEEPER THAN 3:1 OR DITCH BOTTOMS SHALL BE COVERED WITH EROSION CONTROL BLANKET.
- SEE PLAN FOR MORE DETAILED DITCH AND STEEP SLOPE EROSION CONTROL TREATMENTS.

**CASE #PL2020-133**

### TRAINING SECTION 21

DESIGN ENGINEER: MATTHEW R. PAVEK P.E.
TRAINING COURSE: DESIGN OF SWPPP
TRAINING ENTITY: UNIVERSITY OF MINNESOTA
INSTRUCTOR: JOHN CHAPMAN
DATES OF TRAINING COURSE: 5/15/2011 - 5/16/2011
TOTAL TRAINING HOURS: 12
RE-CERTIFICATION: 2/27/2020 (8 HOURS), EXP. 5/31/2023

### OWNER INFORMATION

OWNER:
STEVE FURLONG
PENN LAKE CITYHOMES, LLC
8201 NORMAN CENTER DR.
SUITE 450
BLOOMINGTON, MN 55437
952.314.6087

### AREAS AND QUANTITIES:

| SITE AREA CALCULATIONS | EXISTING CONDITION | | | PROPOSED CONDITION | |
|---|---|---|---|---|---|
| BUILDING COVERAGE | 1,624 SF | 2.0% | | 22,744 SF | 28.6% |
| ALL PAVEMENTS | 2,033 SF | 2.6% | | 23,253 SF | 29.2% |
| ALL NON-PAVEMENTS | 75,916 SF | 95.4% | | 33,576 SF | 42.2% |
| TOTAL SITE AREA | 79,573 SF | 100.0% | | 79,573 SF | 100.0% |
| IMPERVIOUS SURFACE | | | | | |
| EXISTING CONDITION | 3,657 SF | 4.6% | 0.08 | | |
| PROPOSED CONDITION | 45,997 SF | 57.8% | 1.06 | | |
| DIFFERENCE (EX. VS PROP.) | 42,340 SF | 53.2% | 0.97 | | |
| EROSION CONTROL QUANTITIES | | | | | |
| DISTURBED AREA | 79,715 SF | 1.83 | | | |
| SILT FENCE/BIO-ROLL | ±1250 LF | | | | |
| EROSION CONTROL BLANKET | 4,265 SF | | | | |
| INLET PROTECTION DEVICES | 2 EA | | | | |

NOTE: QUANTITIES ARE FOR INFORMATIONAL PURPOSES ONLY. CONTRACTOR SHALL DETERMINE FOR THEMSELVES THE EXACT QUANTITIES FOR BIDDING AND CONSTRUCTION.

### SWPPP CONTACT PERSON

CONTRACTOR:

SWPPP INSPECTOR TRAINING:
ALL SWPPP INSPECTIONS MUST BE PERFORMED BY A PERSON THAT MEETS THE TRAINING REQUIREMENTS OF THE NPDES CONSTRUCTION SITE PERMIT.
TRAINING CREDENTIALS SHALL BE PROVIDED BY THE CONTRACTOR AND KEPT ON SITE WITH THE SWPPP

### PARTY RESPONSIBLE FOR LONG TERM OPERATION AND MAINTENANCE OF PERMANENT STORM WATER MANAGEMENT SYSTEM

PERMANENT STORMWATER MANAGEMENT IS NOT REQUIRED AS PART OF THIS PROJECT TO MEET NPDES PERMIT REQUIREMENTS. THE PROPERTY OWNER IS RESPONSIBLE FOR THE LONG TERM OPERATION AND MAINTENANCE OF THE PROPOSED STORMWATER SYSTEM.

### SWPPP ATTACHMENTS (ONLY APPLICABLE IF SITE IS 1 ACRE OR GREATER):

CONTRACTOR SHALL OBTAIN A COPY OF THE FOLLOWING SWPPP ATTACHMENTS WHICH ARE A PART OF THE OVERALL SWPPP PACKAGE:
ATTACHMENT A. CONSTRUCTION SWPPP TEMPLATE - SITE SPECIFIC SWPPP DOCUMENT
ATTACHMENT B. CONSTRUCTION STORMWATER INSPECTION CHECKLIST
ATTACHMENT C. MAINTENANCE PLAN FOR PERMANENT STORM WATER TREATMENT SYSTEMS
ATTACHMENT D: STORMWATER MANAGEMENT REPORT - ON FILE AT THE OFFICE OF PROJECT ENGINEER. AVAILABLE UPON REQUEST.
ATTACHMENT E: GEOTECHNICAL EVALUATION REPORT - ON FILE AT THE OFFICE OF PROJECT ENGINEER. AVAILABLE UPON REQUEST.

### SUPPLEMENTARY SITE SPECIFIC EROSION CONTROL NOTES:

THESE NOTES SUPERCEDE ANY GENERAL SWPPP NOTES.

THIS PROJECT IS GREATER THAN 1.0 ACRES SO AN NPDES PERMIT IS REQUIRED AND NEEDS TO BE SUBMITTED TO THE MPCA. THE CONTRACTOR IS REQUIRED TO FOLLOW THE GUIDELINES IN THE NPDES PERMIT THROUGHOUT CONSTRUCTION.

#### PROJECT NARRATIVE:

PROJECT IS A REDEVELOPMENT OF AN EXISTING SINGLE FAMILY HOME INTO 15 NEW SINGLE FAMILY TOWNHOMES. SITE, GRADING, UTILITY, AND LANDSCAPE IMPROVEMENTS WILL OCCUR.

#### NATIVE BUFFER NARRATIVE:

PRESERVING A 50' NATURAL BUFFER AROUND WATER BODIES IS NOT REQUIRED AS PART OF THIS PROJECT BECAUSE WATER BODIES ARE NOT LOCATED ON SITE.

#### INFILTRATION NARRATIVE:

INFILTRATION IS REQUIRED AS PART OF THE PROJECT'S PERMANENT STORM WATER MANAGEMENT.

#### SOIL CONTAMINATION NARRATIVE:

SOILS ONSITE HAVE NOT BEEN IDENTIFIED AS CONTAMINATED. AN MPCA SOILS ASSESSMENT WAS COMPLETED AND IT WAS DETERMINED THAT THIS SITE IS APPROPRIATE FOR INFILTRATION.

#### SPECIAL TMDL BMP REQUIREMENTS SITE SPECIFIC (IF REQUIRED):

THIS PROJECT IS WITHIN ONE MILE AND DISCHARGES TO PENN LAKE - PENN LAKE IS IDENTIFIED AS AN IMPAIRED WATER BODY PER THE MPCA'S 303(D) IMPAIRED WATERS LIST. PENN LAKE IS IMPAIRED FOR NUTRIENTS. BECAUSE THESE WATERS ARE LOCATED WITHIN ONE MILE OF THE SITE, BMPS AS DEFINED IN THE NPDES PERMIT ITEMS 23.9 AND 23.10 APPLY. THESE ARE AS FOLLOWS:

1. DURING CONSTRUCTION:
   A. STABILIZATION OF ALL EXPOSED SOIL AREAS MUST BE INITIATED IMMEDIATELY TO LIMIT SOIL EROSION BUT IN NO CASE COMPLETED LATER THAN SEVEN (7) DAYS AFTER THE CONSTRUCTION ACTIVITY IN THAT PORTION OF THE SITE HAS TEMPORARILY OR PERMANENTLY CEASED.
   B. TEMPORARY SEDIMENT BASIN REQUIREMENTS DESCRIBED IN SECTION 14. MUST BE USED FOR COMMON DRAINAGE LOCATIONS THAT SERVE AN AREA WITH FIVE (5) OR MORE ACRES DISTURBED AT ONE TIME.

#### PERMANENT STABILIZATION NOTES SITE SPECIFIC:

PERMANENT SEED MIX
- FOR THIS PROJECT ALL AREAS THAT ARE NOT TO BE SODDED OR LANDSCAPED SHALL RECEIVE A NATIVE PERMANENT SEED MIX.
  - AREAS IN BUFFERS AND ADJACENT TO OR IN WET AREAS MNDOT SEED MIX 33-261 (STORMWATER SOUTH AND WEST) AT 35 LBS PER ACRE.
  - DRY AREAS MNDOT SEED MIX 35-221 (DRY PRAIRIE GENERAL) AT 40 LBS PER ACRE.
- MAINTENANCE SHALL BE IN ACCORDANCE TO THE MNDOT SEEDING MANUAL.

9/23/2020 11:48:01 AM


CivilSite GROUP
Civil Engineering • Surveying • Landscape Architecture
4931 W. 35th Street, Suite 200
St. Louis Park, MN 55416
civilsitegroup.com 612-615-0060


PROJECT
**8525-8545 Penn Avenue**
Bloomington, Minnesota

**Penn Lake CityHomes LLC**
Bloomington, Minnesota

I HEREBY CERTIFY THAT THIS PLAN, SPECIFICATION, OR REPORT WAS PREPARED BY ME OR UNDER MY DIRECT SUPERVISION AND THAT I AM A DULY LICENSED PROFESSIONAL ENGINEER UNDER THE LAWS OF THE STATE OF MINNESOTA.

Matthew R. Pavek
DATE 08.05.20 LICENSE NO. 44263

ISSUE/SUBMITTAL SUMMARY

| DATE | DESCRIPTION |
|---|---|
| 06.17.20 | CITY SUBMITTAL |
| 08.05.20 | CITY SUBMITTAL |
| 08.26.20 | CITY RESUBMITTAL |
| 09.23.20 | CITY RESUBMITTAL |

DRAWN BY: kit REVIEWED BY: kit
PROJECT NUMBER: 19239

REVISION SUMMARY

| DATE | DESCRIPTION |
|---|---|
| 09/23/20 | CITY COMMENTS |

SWPPP - NARRATIVE

# SW1.3

© COPYRIGHT CIVIL SITE GROUP INC.

## ATTACHMENT A: SITE SPECIFIC SWPPP DOCUMENT

**PROJECT NAME**: 8525-8545 PENN AVENUE
**PROJECT LOCATION** (BRIEFLY DESCRIBE WHERE CONSTRUCTION ACTIVITY OCCURS. INCLUDE ADDRESS IF AVAILABLE.)
ADDRESS: 8525-8545 PENN AVE
CITY OR TOWNSHIP: BLOOMINGTON
STATE: MN
ZIP CODE: 55431
LATITUDE/LOGITUDE OF APPROXIMATE CENTROID OF PROJECT: 44.849052 N, -93.308173 E
METHOD OF LAT/LONG COLLECTION (CIRCLE ONE): GPS ONLINE TOOL USGS TOPOGRAPHIC
ALL CITIES WHERE CONSTRUCTION WILL OCCUR: BLOOMINGTON
ALL COUNTIES WHERE CONSTRUCTION WILL OCCUR: HENNEPIN
ALL TOWNSHIPS WHERE CONSTRUCTION WILL OCCUR: NA

**PROJECT SIZE** (NUMBER OF ACRES TO BE DISTURBED): 2.10

**PROJECT TYPE** (CIRCLE ONE): RESIDENTIAL COMMERCIAL/INDUSTRIAL ROAD CONSTRUCTION
RESIDENTIAL & RD CONSTRUCTION OTHER (DESCRIBE): XXXXX

**CUMULATIVE IMPERVIOUS SURFACE** (TO THE NEAREST TENTH ACRE)
EXISTING AREA OF IMPERVIOUS SURFACE : 0.08
POST CONSTRUCTION AREA OF IMPERVIOUS SURFACE: 1.05
TOTAL NEW AREA OF IMPERVIOUS SURFACE: 1.05

**RECEIVING WATERS**

| WATER BODY ID | NAME OF WATER BODY | WATER BODY TYPE | SPECIAL WATER? (Y/N) | IMPARIED WATER (Y/N) |
|---|---|---|---|---|
| 27-0004-00 | PENN LAKE | LAKE | N | Y |
| . | . | . | . | . |
| . | . | . | . | . |
| . | . | . | . | . |

**DATES OF CONSTRUCTION**
CONSTRUCTION START DATE: 08/20
ESTIMATED COMPLETION DATE: 04/21

**GENERAL CONSTRUCTION PROJECT INFORMATION**
DESCRIBE THE CONSTRUCTION ACTIVITY (WHAT WILL BE BUILT, GENERAL TIMELINE, ETC): REMOVAL OF EXISTING BUILDING AND CONSTRUCTION OF NEW SINGLE FAMILY TOWNHOMES AND DRIVES/PARKING.
DESCRIBE SOIL TYPES FOUND AT THE PROJECT: XXXXX

**SITE LOCATION MAP** - ATTACH MAPS (U.S. GEOLOGIC SURVEY 7.5 MINUTE QUADRANGLE, NATIONAL WETLAND INVENTORY MAPS OR EQUIVALENT) SHOWING THE LOCATION AND TYPE OF ALL RECEIVING WATERS, INCLUDING WETLANDS, DRAINAGE DITCHES, STORMWATER PONDS, OR BASINS, ETC. THAT WILL RECEIVE RUNOFF FROM THE PROJECT. USE ARROWS SHOWING THE DIRECTION OF FLOW AND DISTANCE TO THE WATER BODY.

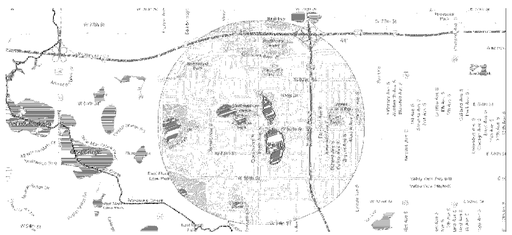

**GENERAL SITE INFORMATION (III.A)**
1. DESCRIBE THE LOCATION AND TYPE OF ALL TEMPORARY AND PERMANENT EROSION PREVENTION AND SEDIMENT CONTROL BEST MANAGEMENT PRACTICIES (BMP'S). INCLUDE THE TIMING FOR INSTALLATION AND PROCEDURES USED TO ESTABLISH ADDITIONAL TEMPORARY BMP'S AS NECESSARY. (III.A.4.A)
THE PROJECT IS PROTECTED BY TWO (W) MAIN BMP'S. SILT FENCE AND INLET PROTECTION DEVICES. THE SILT FENCE WILL BE INSTALLED AT THE DOWNHILL LOCATIONS OF THE SITE AND MONITORED AS NECESSARY. INLET PROTECTION DEVIDES WILL BE INSTALLED IN ALL CATCH BASINS ON THE SITE AND ANY OFF SITE THAT WILL RECEIVE STORMWATER RUNOFF FROM THIS SITE. AS THE PROJECT PROGRESSES ADDITIONAL BMP'S SUCH AS EROSION CONTROL BLANKET MAY BE UTILITZED.
2. ATTACH TO THIS SWPPP A TABLE WITH THE ANTICIPATED QUANITITIES FOR THE LIFE OF THE PROJECT FOR ALL EROSION PREVENTION AND SEDIMENT CONTROL BMP'S (III.A.4.B) SEE PAGE SW1.3
3. ATTACH TO THIS SWPPP A SITE MAP THAT INCLUDES THE FOLLOWING FEATURES (III.A.3.B-F):
EXIST AND FINAL GRADES, INCLUDING DIVIDING LINES AND DIRECTION OF FLOW FOR ALL PRE AND POST-CONSTRUCTION STORMRWATER RUNOFF DRAINAGE AREAS LOCATED WITHIN THE PROJECT LIMITS.

LOCATIONS OF IMPERVIOUS SURFACES AND SOIL TYPES.
- EXISTING AND FINAL GRADES, INCLUDING DIVIDING LINES AND DIRECTION OF FLOW FOR ALL PRE AND POST-CONSTRUCTION STORMWATER RUNOFF DRAINAGE AREAS LOCATED WITHIN PROJECT LIMITS.
- LOCATIONS OF AREAS NOT TO BE DISTRUBED.
- LOCATION OF AREAS OF PHASED CONSTRUCTION.
- ALL SURFACE WATERS AND EXISTING WETLANDS WITHIN ONE MILE FROM THE PROJECT BOUNDARIES THAT WILL RECEIVE STORMWATER RUNOFF FROM THE SITE (IDENTIFIABLE ON MAPS SUCH AS USGS 7.5 MINUTE QUADRANGLE MAPS OR EQUIVALENT. WHERE SURFACE WATERS RECEIVING RUNOFF ASSOCIATED WITH CONSTRUCTION ACTIVITY WILL NOT FIT ON THE PLAN SHEET, THEY MUST BE IDENTIFIED WITH AN ARROW, INDICATING BOTH DIRECTION AND DISTANCE TO THE SURFACE WATER.
- METHODS TO BE USED FOR FINAL STABILIZATION OF ALL EXPOSED SOIL AREA

4. WERE STORMWATER MITIGATION MEASURES REQUIRED AS THE RESULT OF AN ENVIRONMENTAL, ARCHAEOLOGICAL, OR OTHER REQUIRED LOCAL, STATE OR FEDERAL REVIEW OF THE PROJECT? NO
IF YES, DESCRIBE HOW THESE MEASURES WERE ADDRESSED IN THE SWPPP. (III.A.6)
N/A
5. IS THE PROJECT LOCATED IN A KARST AREA SUCH THAT ADDITIONAL MEASURES WOULD BE NECESSARY OT PROJECT DRINKING WATER SUPPLY MANAGEMENT AREAS AS DESCRIBED IN MINN. R. CHAPTERS 7050 AND 7060? NO
IF YES, DESCRIBE THE ADDITIONAL MEASURES TO BE USED. (III.A.7)
N/A
6. DOES THE SITE DISCHARGE TO A CALCEREOUS FEN LISTED IN MINN. R. 7050.0180, SUBP. 6 B? YES OR NO
IF YES, A LETTER OF APPROVAL FROM THE MINNESOTA DEPARTMENT OF NATURAL RESOURCES MUST BE OBTAINED PRIOR TO APPLICATION FOR THIS PERMIT. (PART I B.6 AND PART III.A.8)
7. DOES THE SITE DISCHARGE TO A WATER THAT IS LISTED AS IMPARED FOR THE FOLLOWING POLLUTANT(S) OR STRESSOR(S): PHOSPHORUS, TURBIDITY, DISSOLVED OXYGEN OR BIOTIC IMPAIRMENT? USE THE SPECIAL AND IMPAIRED WATERS SEARCH TOOL AT: WWW.PCA.STATE.MN.US/WATER/STORMWATER/STORMWATER-C.HTML
N/A
IF NO, SKIP TO TRAINING
DOES THE IMPAIRED WATER HAVE AN APPROVED TOTAL MAXIMUM DAILY LOADS (TMDL) WITH AN APPROVED WASTE LOAD ALLOCATION FOR CONSTRUCTION ACTIVITY? NO
IF YES:
A. LIST THE RECEIVING WATER, THE AREAS OF THE SITE DISCHARGING TO IT, AND THE POLLUTANT(S) IDENTIFIED IN THE TMDL.
B. LIST THE BMP'S AND ANY OTHER SPECIFIC CONSTRUCTION STORMWATER RELATED IMPLEMENTATION ACTIVITIES IDENTIFIED IN THE TMDL.

IF THE SITE HAS A DISCHARGE POINT WITHIN ONE MILE OF THE IMPAIRED WATER AND THE WATER FLOWS TO THE IMPAIRED WATER BUT NO SPECIFIC BMPS FOR CONSTRUCTION ARE IDENTIFIED IN THE TMDL, THE ADDITIONAL BMPS IN APPENDIX A (C.1, C.2, C.3 & (C.4-TROUT STREAM)) MUST BE ADDED TO THE SWPPP AND IMPLEMENTED. (III.A.7). THE ADDITIONAL BMPS ONLY APPLY TO THOSE PORTIONS OF THE PROJECT THAT DRAIN TO ONE OF THE IDENTIFIED DISCHARGE POINTS.
N/A

8. IDENTIFY ADJACENT PUBLIC WATERS WHERE THE MINNESOTA DEPARTMENT OF NATURAL RESOURCES (DNR) HAS DECLARED "WORK IN WATER RESTRICTIONS" DURING FISH SPAWNING TIMEFRAMES
N/A

**SELECTION OF A PERMANENT STORMWATER MANAGEMENT SYSTEM (III.D.)**

1. WILL THE PROJECT CREATE A NEW CUMULATIVE IMPERVIOUS SURFACE GREATER THAN OR EQUAL TO ONE ACRE? YES OR NO

IF YES, A WATER QUALITY VOLUME OF ONE INCH OF RUNOFF FROM THE CUMULATIVE NEW IMPERVIOUS SURFACES MUST BE RETAINED ON SITE (SEE PART III.D OF THE PERMIT) THROUGH INFILTRATION UNLESS PROHIBITED DUE TO ONE OF THE REASONS IN PART III.D.1.J. IF INFILTRATION IS PROHIBITED IDENTIFY OTHER METHOD OF OTHER VOLUME REDUCTION (E.G., FILTRATION SYSTEM, WET SEDIMENTATION BASIN, REGIONAL PONDING OR EQUIVALENT METHOD

2. DESCRIBE WHICH METHOD WILL BE USED TO TREAT RUNOFF FROM THE NEW IMPERVIOUS SURFACES CREATED BY THE PROJECT (III.D):
- WET SEDIMENTATION BASIN
- INFILTRATION/FILTRATION
- REGIONAL PONDS
- COMBINATION OF PRACTICES

INCLUDE ALL CALCULATIONS AND DESIGN INFORMATION FOR THE METHOD SELECTED. SEE PART III.D OF THE PERMIT FOR SPECIFIC REQUIREMENTS ASSOCIATED WITH EACH METHOD.

INFILTRATION / FILTRATION / REGIONAL PONDING

CALCULATIONS ARE WITHIN THE SITE STORM WATER MANAGEMENT REPORT AND PART OF THIS SWPPP AS ATTACHMENT D.

3. IF IT IS NOT FEASIBLE TO MEET THE TREATMENT REQUIREMENT FOR THE WATER QUALITY VOLUME, DESCRIBE WHY. THIS CAN INCLUDE PROXIMITY TO BEDROCK OR ROAD PROJECTS WHERE THE LACK OF RIGHT OF WAY PRECLUDES THE INSTALLATION OF ANY PERMANENT STORMWATER MANAGEMENT PRACTICES. DESCRIBE WHAT OTHER TREATMENT, SUCH AS GRASSES SWALES, SMALLER PONDS, OR GRIT CHAMBERS, WILL BE IMPLEMENTED TO TREAT RUNOFF PRIOR TO DISCHARGE TO SURFACE WATERS. (III.C)

IT IS FEASIBLE TO MEET REQUIREMENT FOR WATER QUALITY VOLUME.

4. FOR PROJECTS THAT DISCHARGE TO TROUT STREAMS, INCLUDING TRIBUTARIES TO TROUT STREAMS, IDENTIFY METHOD OF INCORPORATING TEMPERATURE CONTROLS INTO THE PERMANENT STORMWATER MANAGEMENT SYSTEM.

N/A

## SOILS INFORMATION

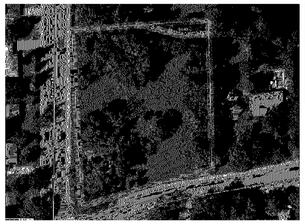

| MAP UNIT SYMBOL | MAP UNIT NAME |
|---|---|
| D64B | URBAN LAND- HUBBARD COMPLEX, MISSISSIPPI RIVER VALLEY, 0 TO 8 PERCENT SLOPES |
| L55C | URBAN LAND - MALARDI COMPLEX, 8 TO 18 PERCENT SLOPES |

**CASE #PL2020-133**

**EROSION PREVENTION PRACTICES (IV.B)**
DESCRIBE THE TYPES OF TEMPORARY EROSION PREVENTION BMP'S EXPECTED TO BE IMPLEMENTED ON THIS SITE DURING CONSTRUCITON:
1. DESCRIBE CONSTRUCTION PHASING, VEGETATIVE BUFFER STRIPS, HORIZONTAL SLOPE GRADING, AND OTHER CONSTRUCTION PRACTICES TO MINIMIZE EROSION. DELINEATE AREAS NOT TO BE DISTURBED (E.G., WITH FLAGS, STAKES, SIGNS, SILT FENCE, ETC.) BEFORE WORK BEGINS.
SILT FENCE WILL BE INSTALLED AT ATHE DOWNHILL LOCATIONS OF THE SITE.
2. DESCRIBE METHODS OF TEMPORARILY STABILIZING SOILS AND SOIL STOCKPILES (E.G., MULCHES, HYDRAULIC TACKIFIERS, EROSION BLANKETS, ETC.):
TEMPORARY EROSION PROTECTION WILL BE SEED AND MULCH AND EROSION BLANKETS WHERE REQUIRED, WITH PERMANENT COVER BEING EITHER SOD OR LANDSCAPE FEATURES.
3. DESCRIBE METHODS OF DISSIPATING VELOCITY ALONG STORMWATER CONVEYANCE CHANNELS AND AT CHANNEL OUTLETS (E.G., CHECK DAMS, SEDIMENT TRAPS, RIP RAP, ETC.):
SOD WILL BE UTILIZED ALONG CHANNELS AND RIP RAP AT CHANNEL.
4. DESCRIBE METHODS TO BE USED FOR STABILIZATION OF DITCH AND SWALE WETTED PERIMETERS (NOTE THAT MULCH, HYDRAULIC SOIL TACKIFIERS, HYDROMULCHES, ETC. ARE NOT ACCEPTABLE SOIL STABILIZATION METHODS FOR ANY PART OF A DRAINAGE DITCH OR SWALE)
FINAL STABILIZATION OF SWALES WILL BE SOD
5. DESCRIBE METHODS TO BE USED FOR ENERGY DISSIPATION AT PIPE OUTLETS (E.G., RIP RAP, SPLASH PADS, GABIONS, ETC.)
RIP RAP WILL BE UTILIZED AT PIPE OUTLETS
6. DESCRIBE METHODS TO BE USED TO PROMOTE INFILTRATION AND SEDIMENT REMOVAL ON THE SITE PRIOR TO OFFSITE DISCHARGE, UNLESS INFEASIBLE (E.G., DIRECT STORMWATER FLOW TO VEGETATED AREAS)
DISCONNECTED IMPERVIOUS AREA AND INFILTRATION AREAS WILL BE UTILIZED
7. FOR DRAINAGE OR DIVERSION DITCHES, DESCRIBE PRACTICES TO STABILIZE THE NORMAL WETTED PERIMETER WITHIN 200 LINEAL FEET OF THE PROPERTY EDGE OR POINT OF DISCHARGE TO SURFACE WATER. THE LAST 200 LINEAL FEET MUST BE STABILIZED WITHIN **24 HOURS** AFTER CONNECTING TO SURFACE WATERS AND CONSTRUCTION IN THAT PORTION OF THE DITCH HAS TEMPORARILY OR PERMANENTLY CEASED FOR ALL DISCHARGES TO SPECIAL, IMPAIRED OR "WORK IN WATER RESTRICTIONS". ALL OTHER REMAINING PORTIONS OF THE TEMPORARY OR PERMANENT DITCHES OR SWALES WITHIN 14 CALENDAR DAYS AFTER CONNECTING TO A SURFACE WATER, PROPERTY EDGE AND CONSTRUCTION IN THAT AREA HAS TEMPORARILY OR PERMANENTLY CEASED.
N/A, NO DITCHES ON SITE
8. DESCRIBE ADDITIONAL EROSION PREVENTION MEASURES THAT WILL BE IMPLEMENTED AT THE SITE DURING CONSTRUCTION (E.G., CONSTRUCTION PHASING, MINIMIZING SOIL DISTURBANCE, VEGETATIVE BUFFERS, HORIZONTAL SLOPE GRADING, SLOPE DRAINING/TERRACING, ETC.):
OTHER EROSION CONTROL PRACTICES INCLUDE BUT ARE NOT LIMITED TO; MINIMIZING SITE EXPOSURE WHEN POSSIBLE.
9. IF APPLICABLE, INCLUDE ADDITIONAL REQUIREMENTS IN APPENDIX A PART C.3 REGARDING MAINTAINING A 100-FOOT BUFFER ZONE OR INSTALLING REDUNDANT BMPS FOR PORTIONS OF THE SITE THAT DRAIN TO SPECIAL WATERS).
N/A
10. IF APPLICABLE, DESCRIBE ADDITIONAL EROSION PREVENTION BMPS TO BE IMPLEMENTED AT THE SITE TO PROTECT PLANNED INFILTRATION AREAS
MINIMIZE SITE EXPOSURE IN AREAS ADJACENT TO INFILTRATION AREAS.

**SEDIMENT CONTROL PRACTICIES (IV.C)**
DESCRIBE THE METHODS OF SEDIMENT CONTROL BMPS TO BE IMPLEMENTED AT THIS SITE DURING CONSTRUCTION TO MINIMIZE SEDIMENT IMPACTS TO SURFACE WATERS, INCLUDING CURB AND GUTTER SYSTEMS
1. DESCRIBE METHODS TO BE USED FOR DOWN GRADIENT PERIMETER CONTROL:
SILT FENCE WILL BE INSTALLED AROUND THE ENTIRE PERIMETER OF THE SITE
2. DESCRIBE METHODS TO BE USED TO CONTAIN SOIL STOCKPILES:
SEED AND MULCH AS WELL AS EROSION CONTROL BLANKETS WILL BE UTILIZED AS NECESSARY
3. DESCRIBE METHODS TO BE USED FOR STORM DRAIN INLET PROTECTION:
SEE INLET PROTECTION DETAILS
4. DESCRIBE METHODS TO MINIMIZE VEHICLE TRACKING AT CONSTRUCTION EXITS AND STREET SWEEPING ACTIVITIES:
THE PROJECT WILL UTILIZE A ROCK CONSTRUCTION ENTRANCE.
5. DESCRIBE METHODS, IF APPLICABLE, ADDITIONAL SEDIMENT CONTROLS (E.G., DIVERSION BERMS) TO BE INSTALLED TO KEEP RUNOFF AWAY FROM PLANNED INFILTRATION AREAS WHEN EXCAVATED PRIOR TO FINAL STABILIZATION OF THE CONTRIBUTING DRAINAGE AREA:
SILT FENCE TO BE INSTALLED IMMEDIATELY AFTER GRADING TO PROTECT INFILTRATION AREAS.
6. DESCRIBE METHODS TO BE USED TO MINIMIZE SOIL COMPACTION AND PRESERVE TOP SOIL (UNLESS INFEASIBLE) AT THIS SITE:
LIGHT TRACKED EQUIPMENT WILL BE USED, TOPSOIL WILL BE STRIPPED AND STOCKPILED
7. DESCRIBE PLANS TO PRESERVE A 50-FOOT NATURAL BUFFER BETWEEN THE PROJECT'S SOIL DISTURBANCE AND A SURFACE WATER OR PLANS FOR REDUNDANT SEDIMENT CONTROLS IF A BUFFER IS INFEASIBLE:
DOUBLE ROW OF SILT FENCE WILL BE INSTALLED ALONG WETLAND. PROJECT WILL NOT DISTURB WITHIN 200 FEET OF WETLAND.
8. DESCRIBE PLANS FOR USE OF SEDIMENTATION TREATMENT CHEMICALS (E.G., POLYMERS, FLOCCULANTS, ETC.) SEE PART IV.C.10 OF THE PERMIT:
N/A
9. IS THE PROJECT REQUIRED TO INSTALL A TEMPORARY SEDIMENT BASIN DUE TO 10 OR MORE ACRES DRAINING TO A COMMON LOCATION OR 5 ACRES OR MORE IF THE SITE IS WITHIN 1 MILE OF A SPECIAL OR IMPAIRED WATER?
NO
IF YES, DESCRIBE (OR ATTACH PLANS ) SHOWING HOW THE BASIN WILL BE DESIGNED AND CONSTRUCTED IN ACCORDANCE WITH PART III.C OF THE PERMIT.
N/A.

**DEWATERING AND BASIN DRAINING (IV.D)**
1. WILL THE PROJECT INCLUDE DEWATERING OR BASIN DRAINING? NO
IF YES, DESCRIBE MEASURES TO BE USED TO TREAT/DISPOSE OF TURBID OR SEDIMENT-LADEN WATER AND METHOD TO PREVENT EROSION OR SCOUR OF DISCHARGE POINTS (SEE PART IV. D OF THE PERMIT);
N/A
2. WILL THE PROJECT INCLUDE USE OF FILTERS FOR BACKWASH WATER? NO
IF YES, DESCRIBE HOW FILTER BACKWASH WATER WILL BE MANAGED ON THE SITE OR PROPERLY DISPOSED (SEE PART III.D.3. OF THE PERMIT):
N/A

**ADDITIONAL BMP'S FOR SPECIAL WATERS AND DISCHARGES TO WETLANDS (APPENDIX A, PARTS C AND D)**
1. SPECIAL WATERS. DOES YOUR PROJECT DISCHARGE TO SPECIAL WATERS? NO
2. IF PROXIMITY TO BEDROCK OR ROAD PROJECTS WHERE THE LACK OF RIGHT OF WAY PRECLUDES THE INSTALLATION OF ANY OF THE PERMANENT STORMWATER MANAGEMENT PRACTICES, THEN OTHER TREATMENT SUCH AS GRASSED SWALES, SMALLER PONDS, OR GRIT CHAMBERS IS REQUIRED PRIOR TO DISCHARGE TO SURFACE WATERS. DESCRIBE WHAT OTHER TREATMENT WILL BE PROVIDED.
N/A
3. DESCRIBE EROSION AND SEDIMENT CONTROLS FOR EXPOSED SOIL AREAS WITH A CONTINUOUS POSITIVE SLOPE TO A SPECIAL WATERS, AND TEMPORARY SEDIMENT BASINS FOR AREAS THAT DRAIN FIVE OR MORE ACRES DISTURBED AT ONE TIME.
N/A
4. DESCRIBE THE UNDISTURBED BUFFER ZONE TO BE USED (NOT LESS THAN 100 LINEAR FEET FROM THE SPECIAL WATER).
N/A
5. DESCRIBE HOW THE PERMANENT STORMWATER MANAGEMENT SYSTEM WILL ENSURE THAT THE PRE AND POST PROJECT RUNOFF RATE AND VOLUME FROM THE 1, AND 2-YEAR 24-HOUR PRECIPITATION EVENTS REMAINS THE SAME.
N/A
6. DESCRIBE HOW THE PERMANENT STORMWATER MANAGEMENT SYSTEM WILL MINIMIZE ANY INCREASE IN THE TEMPERATURE OF TROUT STREAM RECEIVING WATERS RESULTING IN THE 1, AND 2-YEAR 24-HOUR PRECIPITATION EVENTS.
N/A
7. **WETLANDS.** DOES YOUR PROJECT DISCHARGE STORMWATER WITH THE POTENTIAL FOR SIGNIFICANT ADVERSE IMPACTS TO A WETLAND (E.G., CONVERSION OF A NATURAL WETLAND TO A STORMWATER POND)? YES OR NO
IF YES, DESCRIBE THE WETLAND MITIGATION SEQUENCE THAT WILL BE FOLLOWED IN ACCORDANCE WITH PART D OF APPENDIX A.
N/A

**INSPECTIONS AND MAINTENANCE (IV.E)**
DESCRIBE PROCEDURES TO ROUTINELY INSPECT THE CONSTRUCTION SITE:
- ONCE EVERY SEVEN (7) DAYS DURING ACTIVE CONSTRUCTION AND
- WITHIN 24 HOURS AFTER A RAINFALL EVENT GREATER THAN 0.5 INCHES IN 24 HOURS, AND WITHIN (7) DAYS AFTER THAT

INSPECTIONS MUST INCLUDE STABILIZED AREAS, EROSION PREVENTION,AND SEDIMENT CONTROL BMP'S AND INFILTRATION AREAS.
INSPECTOR WILL FOLLOW REQUIREMENTS SPECIFIED ABOVE AND FILL OUT "ATTACHMENT B - CONSTRUCTION STORMWATER INSPECTION CHECKLIST"
1. Describe practices for storage of building products with a potential to leach pollutants to minimize exposure to stormwater:
ALL BUILDING PRODUCTS WILL BE SEALED AND STORED IN A MANNER TO MINIMIZE EXPOSURE
2. Describe practices for storage of pesticides, herbicides, insecticides, fertilizers, treatment chemical, and landscape materials:
ALL LANDSCAPE TREATMENT CHEMICALS WILL BE SEALED AND STORED IN A MANNER TO MINIMIZED EXPOSURE
3. Describe practices for storage and disposal of hazardous materials or toxic waste (e.g., oil, fuel, hydraulic fluids, paint solvents, petroleum-based products, wood preservative, additives, curing compounds, and acids) according to Minn. R. ch. 7045, including restricted access and secondary containment:
ALL HAZARDOUS WASTE WILL BE APPROPRIATELY DISPOSED OF OFF SITE ACCORDING TO LOCAL AND STATE LAWS.
4. Describe collection, storage and disposal of solid waste in compliance with Minn. R. ch. 7035:
ALL CONSTRUCTION DEBRIS AND SOLID WASTER WILL BE APPROPRIATELY DISPOSED OF OFF SITE ACCORDING TO LOCAL AND STATE LAWS
5. Describe management of portable toilets to prevent tipping and disposal of sanitary wastes in accordance with Minn. R. ch. 7049:
SANITARY AND SEPTIC SERVICES WILL BE PROVIDED TO WORKERS WITH PORTABLE FACILITIES MAINTAINED AS NEEDED BY THE PROVIDER.
6. Describe spill prevention and response for fueling and equipment or vehicle maintenance:
EMPLOYEES WILL BE TRAINED IN TECHNIQUES DESIGNED TO MINIMIZE SPILLS. VEHICLES AND EQUIPMENT SHALL BE CHECKED FOR LEAKS.
7. Describe containment and disposal of vehicle and equipment wash water and prohibiting engine degreasing on the site:
ALL CONSTRUCTION VEHICLES SHALL BE WASHED OFF SITE
8. Describe storage and disposal of concrete and other washout wastes so that wastes do not contact the ground:
ALL CONCRETE WASHOUT SHALL OCCUR OFF SITE.

**FINAL STABILIZATION (IV.G)**
1. DESCRIBE METHOD OF FINAL STABILIZATION (PERMANENT COVER) OF ALL DISTURBED AREAS:
FINAL STABILIZATION WILL BE ACCOMPLISHED WITH PAVEMENT, SOD AND LANDSCAPE MATERIALS.
2. DESCRIBE PROCEDURES FOR COMPLETING FINAL STABILIZATION AND TERMINATING PERMIT COVERAGE (SEE PART IV.G.1-5):
UPON STABILIZATION DESCRIBED ABOVE, THE CONTRCTOR AND OWNER SHALL MUTUALLY TRANSFER THE NPDES PERMIT TO THE NEXT OWNER WITH DOCUMENTS DESCRIBING THE NATURE OF TERMINATION PROCEDURE.
**DOCUMENTATION OF INFEASIBILITY:** (IF APPLICABLE)

8/26/2020 3:50:25 PM


CivilSite GROUP
Civil Engineering • Surveying • Landscape Architecture
4931 W. 35th Street, Suite 200
St. Louis Park, MN 55416
civilsitegroup.com 612-615-0060


PROJECT
**8525-8545 Penn Avenue**
Bloomington, Minnesota

**Penn Lake CityHomes LLC**
Bloomington, Minnesota

I HEREBY CERTIFY THAT THIS PLAN, SPECIFICATION, OR REPORT WAS PREPARED BY ME OR UNDER MY DIRECT SUPERVISION AND THAT I AM A DULY LICENSED PROFESSIONAL ENGINEER UNDER THE LAWS OF THE STATE OF MINNESOTA.

Matthew R. Pavek
DATE 08.05.20 LICENSE NO. 44263

ISSUE/SUBMITTAL SUMMARY

| DATE | DESCRIPTION |
|---|---|
| 06.17.20 | CITY SUBMITTAL |
| 08.05.20 | CITY SUBMITTAL |
| 08.26.20 | CITY RESUBMITTAL |

DRAWN BY: kit REVIEWED BY: kit
PROJECT NUMBER: 19239

REVISION SUMMARY

| DATE | DESCRIPTION |
|---|---|

SWPPP - ATTACHMENTS

SW1.4

© COPYRIGHT CIVIL SITE GROUP INC

## ATTACHMENT B: SWPPP INSPECTION FORM

NOTE: THIS INSPECTION REPORT DOES NOT ADDRESS ALL ASPECTS OF THE NATIONAL APOLLUTANT DISCHARGE ELIMINATION SYSTEM/STATE DISPOSAL SYSTEM (NPDES/SDS) CONSTRUCTION STORMWATER PERMIT ISSUED ON AUGUST 1, 2013. THE COMPLETION OF THIS CHECKLIST DOES NOT GUARANTEE THAT ALL PERMIT REQUIREMENTS ARE IN COMPLIANCE; IT IS THE RESPONSIBILITY OF THE PERMITTEE(S) TO READ AND UNDERSTAND THE PERMIT REQUIREMENTS.

**FACILITY INFORMATION**
SITE NAME:
FACILITY ADDRESS: PERMIT NUMBER:
CITY: STATE: ZIP CODE:

**INSPECTION INFORMATION**
INSPECTOR NAME: _____ PHONE NUMBER: _____
DATE (MM/DD/YYYY): _____ TIME: _____ AM / PM
IS THE INSPECTOR CERTIFIED IN SEDIMENT AND EROSION CONTROL AND IS IT DOCUMENTED IN THE STORMWATER POLLUTION PREVENTION PLAN (SWPPP)?
IS THIS INSPECTION ROUTINE OR IN RESPONSE TO A STORM EVENT:
RAINFALL AMOUNT (IF APPLICABLE): _____
IS THE SITE WITHIN ONE AERIAL MILE OF A SPECIAL OR IMPARED WATER?
IF YES, FOLLOW APPENDIX A AND OTHER APPLICABLE PERMIT REQUIREMENTS

**NOTE:** IF N/A IS SELECTED AT ANY TIME, SPECIFY WHY IN THE COMMENT AREA FOR THAT SECTION.

**EROSION CONTROL REQUIREMENT (PART IV.B)**

| | Y | N | N/A |
|---|---|---|---|
| 1. SOIL STABILIZATION WHERE NO CONSTRUCTION ACTIVITY FOR 14 DAYS? (7 DAYS WHERE APPLICABLE) | ☐ | ☐ | ☐ |
| 2. HAS THE NEED TO DISTURB STEEP SLOPES BEEN MINIMIZED? | ☐ | ☐ | ☐ |
| 3. ALL DITCHES STABILIZED 200; BACK FROM POINT OF DISCHARGE WITHIN 24 HOURS? (NOT MULCH) | ☐ | ☐ | ☐ |
| 4. ARE THERE BMP'S FOR ONSITE STOCKPILES? | ☐ | ☐ | ☐ |
| 5. ARE APPROPRIATE BMP'S INSTALLED PROTECTING INLETS/OUTLETS? | ☐ | ☐ | ☐ |
| 6. DO PIPE OUTLETS HAVE ENERGY DISSIPATION? | ☐ | ☐ | ☐ |

**COMMENTS:**

**SEDIMENT CONTROL REQUIREMENT (PART IV.C)**

| | Y | N | N/A |
|---|---|---|---|
| 1. PERIMETER CONTROL INSTALLED ON ALL DOWN GRADIENT PERIMETERS? | ☐ | ☐ | ☐ |
| 2. PERIMETER CONTROL TRENCHED IN WHERE APPROPRIATE? | ☐ | ☐ | ☐ |
| 3. 50 FOOT NATURAL BUFFER MAINTAINED AROUND ALL SURFACE WATERS? | ☐ | ☐ | ☐ |
| 3.1. IF NO, HAVE REDUNDANT SEDIMENT CONTROLS BEEN INSTALLED? | ☐ | ☐ | ☐ |
| 4. INLET PROTECTION ON ALL CATCH BASINS AND CULVERT INLETS? | ☐ | ☐ | ☐ |
| 5. VEHICLE TRACKING BEST MANAGEMENT PRACTICES (BMP'S) AT ALL SITE EXITS? | ☐ | ☐ | ☐ |
| 6. ALL TRACKED SEDIMENT REMOVED WITHIN 24 HOURS? | ☐ | ☐ | ☐ |
| 7. ARE ALL INFILTRATION SYSTEMS STAKED AND MARKED TO AVOID COMPACTION? | ☐ | ☐ | ☐ |
| 8. ARE ALL INFILTRATION AREAS PROTECTED WITH A PRETREATMENT DEVICE? | ☐ | ☐ | ☐ |
| 9. DO ALL STOCKPILES HAVE PERIMETER CONTROLS? | ☐ | ☐ | ☐ |

**COMMENTS:**

**MAINTENANCE-EROSION AND SEDIMENT CONTROL BMP'S (PART IV.E.)**

| | Y | N | N/A |
|---|---|---|---|
| 1. ARE ALL PREVIOUSLY STABILIZED AREAS MAINTAINING 80% GROUND COVER? | ☐ | ☐ | ☐ |
| 2. ANY DITCH EROSION OBSERVED? | ☐ | ☐ | ☐ |
| 3. PERIMETER CONTROL–HAS SEDIMENT REACHED ONE HALF THE HEIGHT OF THE DEVICE? | ☐ | ☐ | ☐ |
| 4. ARE INLET PROTECTION DEVICES MAINTAINED AND FUNCTIONING PROPERLY? | ☐ | ☐ | ☐ |

**COMMENTS:**

**OTHER**

| | Y | N | N/A |
|---|---|---|---|
| 1. ARE ALL MATERIALS THAT CAN LEACH POLLUTANTS UNDER COVER? | ☐ | ☐ | ☐ |
| 2. HAS ACCESS BEEN RESTRICTED TO ONSITE HAZARDOUS MATERIALS? | ☐ | ☐ | ☐ |
| 3. DOES ON-SITE FUELING ONLY OCCUR IN A CONTAINED AREA? | ☐ | ☐ | ☐ |
| 4. ARE ALL SOLID WASTES BEING PROPERLY DISPOSED OF? | ☐ | ☐ | ☐ |
| 5. IS THE CONCRETE WASHOUT AREA COMPLETELY CONTAINED? | ☐ | ☐ | ☐ |
| 6. IS THE CONCRETE WASHOUT AREA MARKED WITH SIGN? | ☐ | ☐ | ☐ |

**COMMENTS:**

| | Y | N | N/A |
|---|---|---|---|
| 7. WERE ANY DISCHARGES SEEN DURING THIS INSPECTION, SEDIMENT, WATER, OR OTHERWISE? | ☐ | ☐ | ☐ |

7.1. IF YES, STATE THE EXACT LOCATION OF ALL POINTS OF DISCHARGE. PHOTOGRAPH THE DISCHARGE AND DESCRIBE THE DISCHARGE (COLOR, ODOR, FOAM, OIL SHEEN, ETC). HOW WILL IT BE REMOVED? HOW DID THE DISCHARGE HAPPEN? HOW MUCH WAS DISCHARGED? HOW WILL IT BE STOPPED, AND HOW LONG WILL IT TAKE TO STOP? IS THE DISCHARGE GOING INTO AN ADJACENT SITE? WAS THE DISCHARGE A SEDIMENT DELTA? IF YES, WILL THE DELTA BE RECOVERED WITHIN 7 DAYS?

8. WILL A PERMANENT STORMWATER MANAGEMENT SYSTEM BE UTILIZED IN THIS PROJECT AS REQUIRED AND IN ACCORDANCE WITH PART III.D OF THE PERMIT? DESCRIBE:

| | Y | N | N/A |
|---|---|---|---|
| 9. IS ANY DEWATERING OCCURRING ON SITE? | ☐ | ☐ | ☐ |

9.1. IF YES, WHERE? WHAT BMP IS BEING USED? HOW MUCH WATER IS BEING DEWATERED? IS THE WATER CLEAR? WHERE IS THE WATER BEING DISCHARGED TO?

| | Y | N | N/A |
|---|---|---|---|
| 10. IS A COPY OF THE SWPPP LOCATED ON THE CONSTRUCTION SITE? | ☐ | ☐ | ☐ |
| 11. HAS THE SWPPP BEEN FOLLOWED AND IMPLEMENTED ON SITE? | ☐ | ☐ | ☐ |
| 12. IS A SEDIMENTATION BASIN REQUIRED FOR THIS PROJECT AS SPECIFIED IN THE PERMIT? | ☐ | ☐ | ☐ |
| 12.1. IF YES, ARE THEY MAINTAINED AS SPECIFIED IN THE PERMIT? | ☐ | ☐ | ☐ |
| 13. IS THE TOPSOIL ON THIS PROJECT BEING PRESERVED? | ☐ | ☐ | ☐ |

13.1. IF YES, EXPLAIN HOW THE TOP SOIL IS BEING PRESERVED. IF NO, EXPLAIN WHY IT WAS INFEASIBLE.

| | Y | N | N/A |
|---|---|---|---|
| 14. ARE ALL INFILTRATION SYSTEMS MARKED TO AVOID COMPACTION? | ☐ | ☐ | ☐ |
| 14.1. DO ALL INFILTRATION AREAS HAVE PRETREATMENT DEVICES? | ☐ | ☐ | ☐ |

15. DESCRIPTION OF AREAS OF NON-COMPLIANCE NOTED DURING THE INSPECTION, REQUIRED CORRECTIVE ACTIONS, AND RECOMMENDED DATE OF COMPLETION OF CORRECTIVE ACTIONS:

16. PROPOSED AMENDMENTS TO THE SWPPP:

17. POTENTIAL AREAS OF FUTURE CONCERN:

18. ADDITIONAL COMMENTS

DISCLOSURES:

- AFTER DISCOVERY, THE PERMIT REQUIRES MANY OF THE DEFICIENCIES THAT MAY BE FOUND IN THIS CHECKLIST BE CORRECTED WITHIN A SPECIFIED PERIOD OF TIME. SEE PERMIT FOR MORE DETAILS.
- THIS INSPECTION CHECKLIST IS AN OPTION FOR SMALL CONSTRUCTION SITES. LARGE CONSTRUCTION SITES AND LINEAR PROJECTS REQUIRE MORE EXTENSIVE/MORE LOCATION SPECIFIC INSPECTION REQUIREMENTS.
- THE PERMITTEE(S) IS/ARE RESPONSIBLE FOR THE INSPECTION AND MAINTENANCE OF TEMPORARY AND PERMANENT WATER QUALITY MANAGEMENT BMP'S AS WELL AS EROSION PREVENTION AND SEDIMENT CONTROL BMP'S UNTIL ANOTHER PERMITTEE HAS OBTAINED COVERAGE UNDER THIS PERMIT ACCORDING TO PART II.B.5., OR THE PROJECT HAS UNDERGONE FINAL STABILIZATION AND A NOTICE OF TERMINATION HAS BEEN SUBMITTED TO THE MPCA.

## ATTACHMENT C: MAINTENANCE PLAN FOR PERMANENT STORM WATER TREATMENT SYSTEM

ATTACHMENT C - COMBINED
FACILITY MANAGEMENT SCHEDULE

1. ALL STORMWATER RETENTION, DETENTION AND TREATMENT BASINS MUST BE INSPECTED AT LEAST ONCE A YEAR TO DETERMINE THAT BASIN RETENTION AND TREATMENT CHARACTERISTICS ARE ADEQUATE. A STORAGE TREATMENT BASIN WILL BE CONSIDERED INADEQUATE IF SEDIMENT HAS DECREASED THE WET STORAGE VOLUME BY 50 PERCENT OR DRY STORAGE VOLUME BY 25 PERCENT OF ITS ORIGINAL DESIGN VOLUME. BASED ON THIS INSPECTION, IF A STORMWATER BASIN REQUIRES SEDIMENT CLEANOUT, THE BASIN WILL BE RESTORED TO ITS ORIGINAL DESIGN CONTOURS AND VEGETATED STATE WITHIN ONE YEAR OF THE INSPECTION DATE.
2. ALL GRIT CHAMBERS, SUMP CATCH BASINS, SUMP MANHOLES, OUTLET STRUCTURES, CULVERTS, OUTFALL STRUCTURES AND OTHER STORMWATER FACILITIES FOR WHICH MAINTENANCE REQUIREMENTS ARE NOT OTHERWISE SPECIFIED HEREIN MUST BE INSPECTED IN THE SPRING, SUMMER AND FALL OF EACH YEAR. WITHIN 30 DAYS OF THE INSPECTION DATE, ALL ACCUMULATED SEDIMENT AND DEBRIS MUST BE REMOVED SUCH THAT EACH STORMWATER FACILITY OPERATES AS DESIGNED AND PERMITTED. CONTRIBUTING DRAINAGE AREAS MUST BE KEPT CLEAR OF LITTER AND VEGETATIVE DEBRIS, INFLOW PIPES AND OVERFLOW SPILLWAYS KEPT CLEAR, INLET AREAS KEPT CLEAN, AND UNDESIRABLE VEGETATION REMOVED. EROSION IMPAIRING THE FUNCTION OR INTEGRITY OF THE FACILITIES, IF ANY, WILL BE CORRECTED, AND ANY STRUCTURAL DAMAGE IMPAIRING OR THREATENING TO IMPAIR THE FUNCTION OF THE FACILITIES MUST BE REPAIRED.
3. VOLUME CONTROL FACILITIES AND CONTRIBUTING DRAINAGE AREAS MUST BE INSPECTED EVERY THREE MONTHS DURING THE OPERATIONAL PERIOD (BETWEEN SPRING SNOWMELT AND FIRST SUBSTANTIAL SNOWFALL) AND MONITORED AFTER RAINFALL EVENTS OF 1 INCH OR MORE TO ENSURE THAT THE CONTRIBUTING DRAINAGE AREA IS CLEAR OF LITTER AND DEBRIS, INFLOW PIPES AND OVERFLOW SPILLWAYS ARE CLEAR, INLET AREAS ARE CLEAN, UNDESIRABLE VEGETATION IS REMOVED AND THERE IS NO EROSION IMPAIRING OR THREATENING TO IMPAIR THE FUNCTION OF A FACILITY. IF SEDIMENT HAS ACCUMULATED IN A INFILTRATION FEATURE, WITHIN 30 DAYS OF INSPECTION DEPOSITED SEDIMENTS MUST BE REMOVED, THE INFILTRATION CAPACITY OF THE UNDERLYING SOILS MUST BE RESTORED, AND ANY SURFACE DISTURBANCE MUST BE STABILIZED. INSPECTION MUST ENSURE THAT SEDIMENT TRAPS AND FOREBAYS ARE TRAPPING SEDIMENT AND THAT MORE THAN 50 PERCENT OF THE STORAGE VOLUME REMAINS, THE CONTRIBUTING DRAINAGE AREA IS STABLE (I.E., NO EROSION IS OBSERVED), AND INLETS AND OUTLET/OVERFLOW SPILLWAYS ARE IN GOOD CONDITIONS WITH NO EROSION. MAINTENANCE TECHNIQUES USED MUST PROTECT THE INFILTRATION CAPACITY OF THE PRACTICE BY LIMITING SOIL COMPACTION TO THE GREATEST EXTENT POSSIBLE (E.G., BY USING LOW-IMPACT EARTH-MOVING EQUIPMENT).
4. UNDERGROUND STORAGE CHAMBERS MUST BE INSPECTED AT LEAST ONCE A YEAR TO ENSURE THAT ADEQUATE STORAGE CAPACITY REMAINS. CAPACITY WILL BE CONSIDERED INADEQUATE IF SEDIMENT HAS DECREASED THE STORAGE VOLUME BY 50 PERCENT OF ITS ORIGINAL DESIGN VOLUME. ACCUMULATED DEBRIS AND SEDIMENT WILL BE REMOVED, AND INLET AND OUTLET STRUCTURES WILL BE CLEARED OF ANY FLOW IMPEDIMENTS.

**CASE #PL2020-133**

8/26/2020 3:50:26 PM


CivilSite GROUP
Civil Engineering • Surveying • Landscape Architecture
4931 W. 35th Street, Suite 200
St. Louis Park, MN 55416
civilsitegroup.com 612-615-0060


PROJECT
**8525-8545 Penn Avenue**
Bloomington, Minnesota

**Penn Lake CityHomes LLC**
Bloomington, Minnesota

I HEREBY CERTIFY THAT THIS PLAN, SPECIFICATION, OR REPORT WAS PREPARED BY ME OR UNDER MY DIRECT SUPERVISION AND THAT I AM A DULY LICENSED PROFESSIONAL ENGINEER UNDER THE LAWS OF THE STATE OF MINNESOTA.

Matthew R. Pavek
DATE 08.05.20 LICENSE NO. 44263

ISSUE/SUBMITTAL SUMMARY

| DATE | DESCRIPTION |
|---|---|
| 06.17.20 | CITY SUBMITTAL |
| 06.05.20 | CITY SUBMITTAL |
| 06.26.20 | CITY RESUBMITTAL |

DRAWN BY: kit REVIEWED BY: kit
PROJECT NUMBER: 19739

REVISION SUMMARY

| DATE | DESCRIPTION |
|---|---|

SWPPP - ATTACHMENTS

SW1.5

© COPYRIGHT CIVIL SITE GROUP INC.