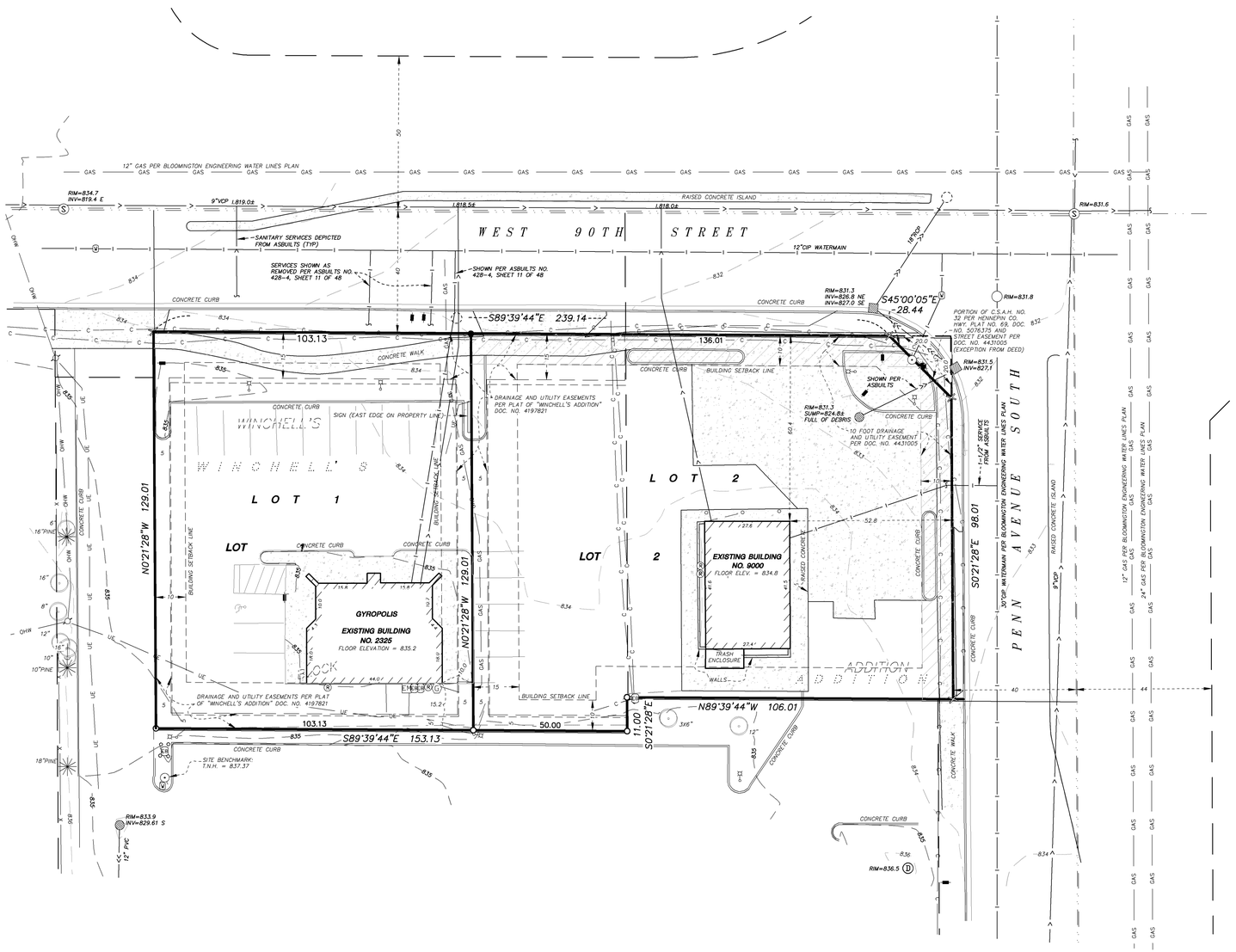

EXISTING CONDITIONS SURVEY
FOR: HTG ARCHITECTS

SITE ADDRESSES:

2325 90th Street West, (Lot 1)
AND
9000 Penn Avenue South, (Lot 2)

Bloomington, Minnesota.

LEGAL DESCRIPTION:

Lot 1 Block 1, WINCHELL'S ADDITION, Hennepin County County, Minnesota.
AND
Lot 2 Block 1, WINCHELL'S ADDITION, Except Road, Hennepin County County, Minnesota.

SURVEY NOTES:

1. The horizontal datum and bearings are based on the Hennepin County Coordinate System NAD83(2011).
2. The vertical datum is NAVD 88. The site benchmark is the top nut of the hydrant located near the southwest corner of Lot 1 (depicted hereon). Elevation = 837.37 feet.
3. The area of Lot 1 is 13,304 square feet or 0.3054 acres.

   The area of Lot 2 is 18,958 square feet or 0.4352 acres. The area of Lot 2, less the lands per HENNEPIN COUNTY HIGHWAY RIGHT-OF-WAY PLAT NO. 69, is 18,758 square feet or 0.4306 acres.
4. The location and extent of underground utilities, if shown, are based upon existing drawings provided by the utility companies, above ground evidence and Gopher State One Call markings per ticket number 220060272 and 220060275. Exclusive of excavation, there is no guarantee as to the accuracy or the completeness of this information. The size and location should be considered approximate. Additional underground utilities may be present. Verification of the existence and location of all utilities should be obtained from the utility owners prior to any planning or design. In accordance with State Statute, the location of utilities shall be confirmed prior to any demolition or construction.
5. The tree information shown hereon was collected during the field survey by non-forestry trained Anderson Engineering of Minnesota survey personnel. Tree sizes are estimates and locations are accurate to plus or minus three feet.
6. No title work was provided for the preparation of this survey to verify the legal description or the existence of any easements or encumbrances.
7. At the time of this survey, portions of the subject property were covered in significant amounts of snowfall, snow piles and ice. Some catch basins were observed to be full of ice and snow. Some improvements may not be depicted.
8. According to the City of Bloomington, the subject property is zoned B-4 (Neighborhood Commercial Center) and has the building setback requirements listed below. It is recommended that the property owner obtain a zoning letter from the City to verify all conditions that affect the property through the city zoning ordinance. This survey does not purport to describe all conditions contained in said ordinance.

   BUILDING SETBACKS

   Front = 10 feet
   Side = 10 feet
   Rear = 15 feet

LEGEND

- CATCH BASIN
- ELECTRIC BOX
- ELECTRIC METER
- GAS METER
- GUARD POST
- HANDICAP PARKING
- HYDRANT
- LIGHT POLE
- MANHOLE
- MANHOLE NOT FIELD VERIFIED
- POWER POLE
- POWER POLE ANCHOR
- ROOF DRAIN
- SANITARY MANHOLE
- SEMAPHORE
- SIGN
- WATER VALVE
- FOUND IRON MONUMENT
- SET 1/2"X14" IRON PIPE MARKED L.S. NO. 43501
- SCRIBED "X" IN SURFACE
- CONIFEROUS TREE
- DECIDUOUS TREE
- COMMUNICATION
- FENCE
- GAS MAIN
- OVERHEAD WIRES
- SANITARY SEWER
- STORM SEWER
- UNDERGROUND ELECTRIC
- WATER MAIN
- BITUMINOUS SURFACE
- CONCRETE SURFACE
- LANDSCAPE ROCK
- LANDSCAPE WOODCHIPS
- DEPRESSION CONTOUR
- CIP CAST IRON PIPE
- VCP VITRIFIED CLAY PIPE

VICINITY MAP

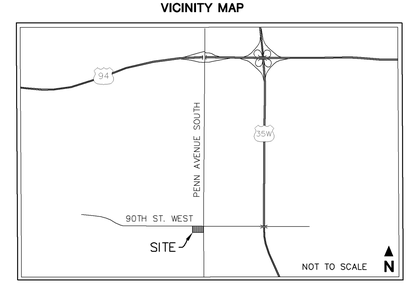

HTG architects
www.htg-architects.com
Minneapolis Tampa Bismarck

9300 Hennepin Town Road
Minneapolis, MN 55347
Tel: 952.278.8880
Fax: 952.278.8822

PROJECT

GYROPOLIS

ADDITION/REMODELING

2325 W 90TH ST
BLOOMINGTON, MINNESOTA

ISSUED SET
REVISIONS

DATE	NO.	
9/27/22	1	CITY SUBMITTAL
10/13/22	2	BOUNDARY ADJUSTMENT

I HEREBY CERTIFY THAT THIS SURVEY WAS PREPARED BY ME OR UNDER MY DIRECT SUPERVISION, AND THAT I AM A DULY LICENSED LAND SURVEYOR UNDER THE LAWS OF THE STATE OF MINNESOTA.

DAVID ANDERSON, LS

43501 — MN. REG. NO.
1/28/22 — DATE

ANDERSON
13605 1st Avenue N. #100
Plymouth, MN 55441 | ae-mn.com
P 763.412.4000 | F 763.412.4090
Anderson Engineering of Minnesota, LLC

EXISTING CONDITIONS SURVEY

DRAWN BY: BF CHECKED BY: BF

C1

16318 (AEMN)

COPYRIGHT © BY HTG ARCHITECTS

KEY NOTES

1. REMOVE EXISTING CONCRETE CURB AND GUTTER (TYP.).
2. REMOVE EXISTING CONCRETE APRON. RESTORE WEST 90TH ST PAVEMENT, CONCRETE CURB AND GUTTER, AND BOULEVARD PER CITY OF BLOOMINGTON STANDARDS.
3. REMOVE EXISTING CONCRETE WALK PER LIMITS SHOWN.
4. REMOVE EXISTING GAS STATION STRUCTURE IN ITS ENTIRETY.
5. REMOVE EXISTING PAVEMENT WITHIN CONSTRUCTION LIMITS.
6. CONTRACTOR TO COORDINATE RELOCATION OF EXISTING UNDERGROUND SERVICE WITH RESPECTIVE UTILITY COMPANY
7. ABANDON WATER SERVICE AT MAIN PER CITY STANDARDS
8. REMOVE & REPLACE IN-KIND FOR UTILITY CONNECTIONS. PROVIDE STAGE APPROPRIATE TRAFFIC CONTROL MEASURES PER MUTCD
9. REMOVE EXISTING WATER SERVICE
10. REMOVE EXISTING SANITARY SEWER SERVICE TO ROW LINE
11. REMOVE EXISTING STORM SEWER AND MANHOLE AS SHOWN

GENERAL NOTES

1. UTILITIES SHOWN HERE ARE FOR INFORMATIONAL USE ONLY AND ARE NOT GUARANTEED IN THEIR ACCURACY. VERIFY WORK. NOTIFY ENGINEER OF ANY/ALL DISCREPANCIES IMMEDIATELY.
2. CONTRACTOR SHALL HIRE PRIVATE UTILITY LOCATOR AS NECESSARY TO VERIFY UNDERGROUND UTILITIES. UTILITIES SHOWN ON PLANS MAY VARY FROM EXISTING CONDITIONS, AND CONTRACTOR IS RESPONSIBLE FOR ANY DAMAGE CAUSED TO UTILITY LINES SHOWN, NOT SHOWN, OR SHOWN INCORRECTLY.
3. UTILITIES MUST BE LOCATED PRIOR TO EXCAVATION OR GRADING ON ANY SITE. CALL GOPHER SATE ONE CALL AT 1-800-252-1166 AS SOON AS POSSIBLE TO SCHEDULE UTILITY LOCATIONS FOR THIS SITE.
4. A MINIMUM OF 24-HOUR NOTICE IS REQUIRED WHEN SCHEDULING INSPECTIONS. PLEASE FORWARD THIS INFORMATION TO ANY AND ALL AFFECTED SUB-CONTRACTORS FOR THIS PROJECT.

LEGEND

- PROPERTY LIMITS
- EXISTING WATERMAIN
- EXISTING SANITARY SEWER
- EXISTING STORM SEWER
- EXISTING FENCE
- EXISTING GAS MAIN
- EXISTING OVERHEAD WIRES
- EXISTING TELEPHONE
- EXISTING UNDERGROUND ELECTRIC
- EXISTING HYDRANT AND GV
- EXISTING SANITARY MANHOLE
- EXISTING STORM SEWER INLET
- REMOVE EXISTING BUILDING STRUCTURE
- REMOVE EXISTING APRON
- REMOVE EXISTING CONCRETE WALK
- REMOVE EXISTING CONCRETE C&G
- REMOVE TREE

N

0 20' 40'

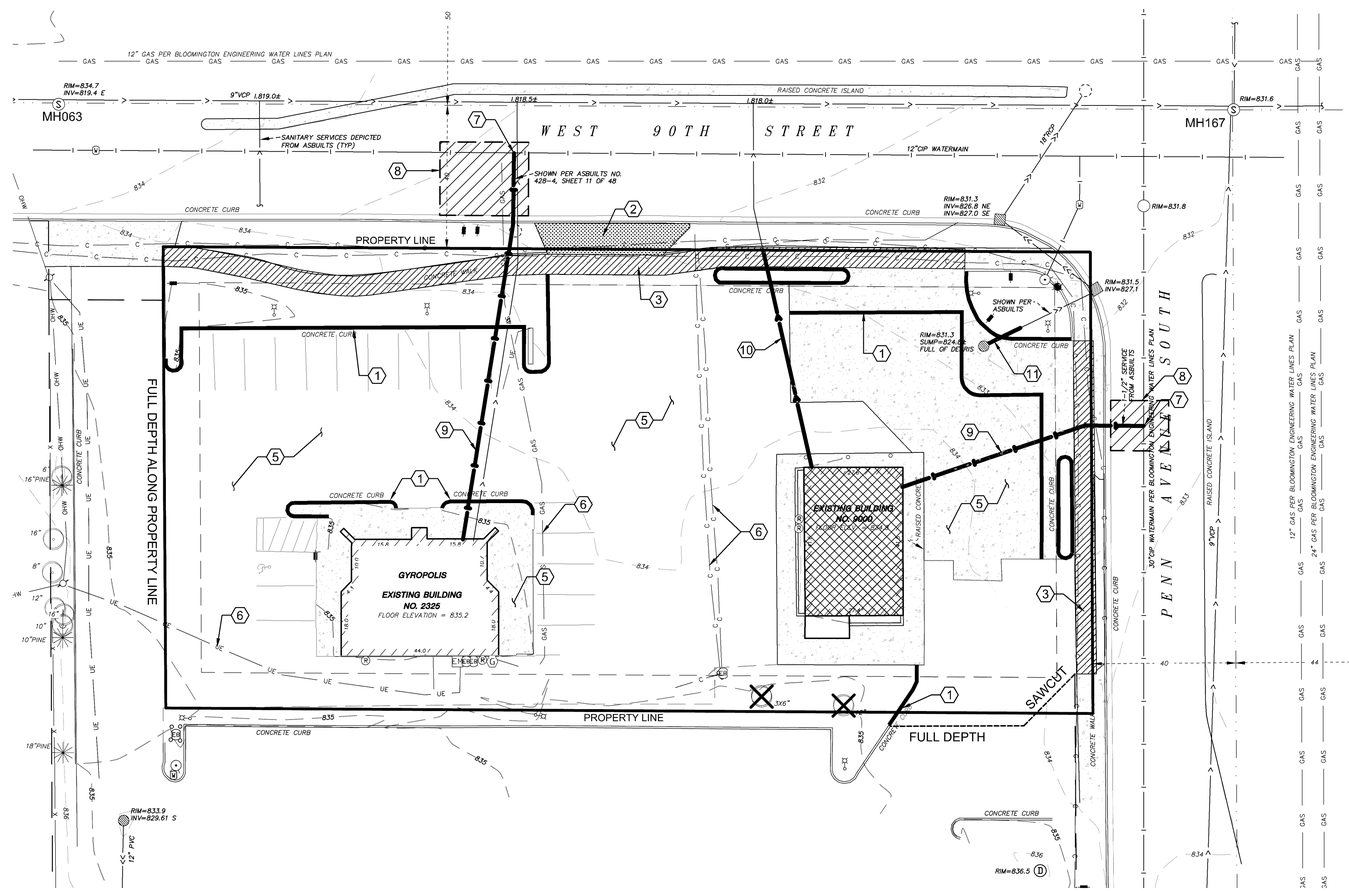

CALL 48 HOURS BEFORE DIGGING
Utilities Underground Location Center
DIAL 811
811
Know what's below, Call before you dig.

HTG architects
www.htg-architects.com
Minneapolis Tampa Bismarck

9300 Hennepin Town Road
Minneapolis, MN 55347
Tel: 952.278.8880
Fax: 952.278.8822

PROJECT

GYROPOLIS

ADDITION/REMODELING

2325 W 90TH ST
BLOOMINGTON, MINNESOTA

ISSUED SET
REVISIONS

DATE	NO.	
9/27/22	1	CITY SUBMITTAL
10/13/22	2	BOUNDARY ADJUSTMENT

I HEREBY CERTIFY THAT THIS PLAN, SPECIFICATION OR REPORT WAS PREPARED BY ME OR UNDER MY DIRECT SUPERVISION, AND THAT I AM A DULY LICENSED CIVIL ENGINEER UNDER THE LAWS OF THE STATE OF MINNESOTA

NOT FOR CONSTRUCTION
Brian Field, PE

56013 — REG. NO.
10/13/2022 — DATE

ANDERSON
13605 1st Avenue N. #100
Plymouth, MN 55441 | ae-mn.com
P 763.412.4000 | F 763.412.4090
Anderson Engineering of Minnesota, LLC

DEMOLITION PLAN

DRAWN BY: BF CHECKED BY: BF

C2

16318 (AEMN)

COPYRIGHT © BY HTG ARCHITECTS

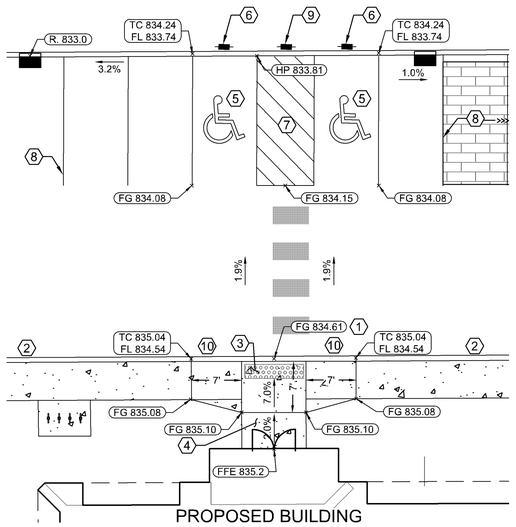

1 PEDESTRIAN CURB RAMP ENLARGEMENT

SCALE:1"=10'

0 10' 20'

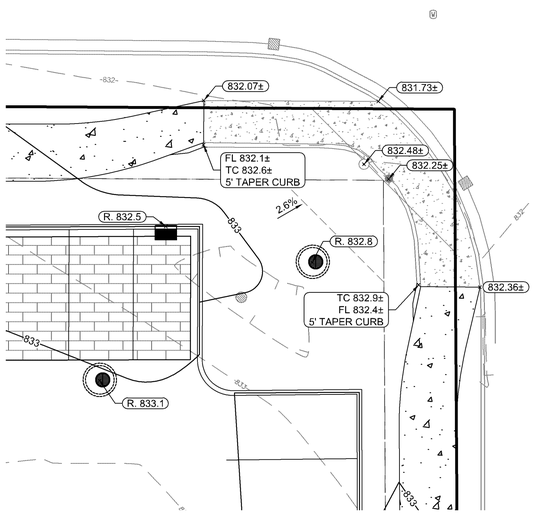

2 NE CORNER ENLARGEMENT

SCALE:1"=10'

0 10' 20'

CALL 48 HOURS BEFORE DIGGING

Utilities Underground Location Center

DIAL 811

811

Know what's below, Call before you dig.

KEY NOTES

1. 0" CURB HEIGHT FOR FULL LENGTH OF CONCRETE WALK.
2. FULL CURB HEIGHT
3. DETECTABLE WARNING MAY BE PART OF 4'X4' LANDING AREA IF IT IS NOT FEASIBLE TO CONSTRUCT THE LANDING OUTSIDE OF THE DETECTABLE WARNING AREA.
4. 4' BY 4' MIN. LANDING WITH MAX. 2.0% SLOPE IN ALL DIRECTIONS
5. WHITE REFLECTIVE PAINT RECTANGLE CENTERED AROUND ACCESSIBILITY PARKING SYMBOL. LINE TO BE 3 INCHES WIDE, OVER A WIDTH OF 36 INCHES AND HEIGHT OF 41 INCHES PER 2009 MUTCD CODE FIGURE 3B.20.
6. HANDICAP STALL SIGN TO COMPLY WITH 2020 MN ACCESSIBILITY CODE 502.7
7. 4" PAINTED DIAGONAL LINES 45° - 3' CENTER TO CENTER.
8. 4" PAINTED PARKING STALL LINES.
9. NO PARKING SIGN. MUTCD R8-3. INSTALL MIN. OF 60" TO MAX. OF 66" HIGH MEASURED FROM HEAD OF ACCESS AISLE PAVEMENT ELEVATION TO BOTTOM OF SIGN PER 2020 MN ACCESSIBILITY CODE 502.4.4.
10. VARIABLE HEIGHT CURB

CONTRACTOR NOTES

1. PROPOSED SPOT ELEVATIONS ARE TO TOP OF FINISHED SURFACE UNLESS OTHERWISE NOTED IN LEGEND.
2. ALL CONSTRUCTION OF HANDICAP STALLS, ROUTES, & CURB RAMPS TO COMPLY WITH THE 2020 MN ACCESSIBILITY CODE.
3. CONTRACTION JOINTS SHALL BE CONSTRUCTION ALONG ALL GRADE BREAKS. ALL GRADE BREAKS SHALL BE PERPENDICULAR TO THE PATH OF TRAVEL.
4. TO ENSURE RAMPS & LANDINGS ARE PROPERLY CONSTRUCTED, LANDINGS MAY BE CAST SEPARATELY.
5. ALL SLOPES ARE ABSOLUTE, RATHER THAN RELATIVE TO SIDEWALK/ROADWAY GRADES.
6. TOP OF CURB SHALL MATCH PROPOSED ADJACENT WALK GRADE.
7. FOUR FOOT MIN WIDTH OF DETECTABLE WARNING IS REQUIRED FOR ALL RAMPS. DETECTABLE WARNINGS SHALL CONTINUOUSLY EXTEND FOR A MIN. OF 24" IN THE PATH OF TRAVEL.

SPOT ELEVATION KEY

±	EXISTING GRADE
HP	HIGH POINT ELEVATION
TC	TOP OF CURB ELEVATION
R.	RIM ELEVATION
I.	INVERT ELEVATION

N

0 20' 40'

LEGEND

	PROPERTY LIMITS
966	EXISTING MINOR CONTOUR
965	EXISTING MAJOR CONTOUR
966	PROPOSED MINOR CONTOUR
965	PROPOSED MAJOR CONTOUR
× 959.4	EXISTING SPOT ELEVATION
⟹	DRAINAGE ARROW
	PROPOSED CONCRETE C&G

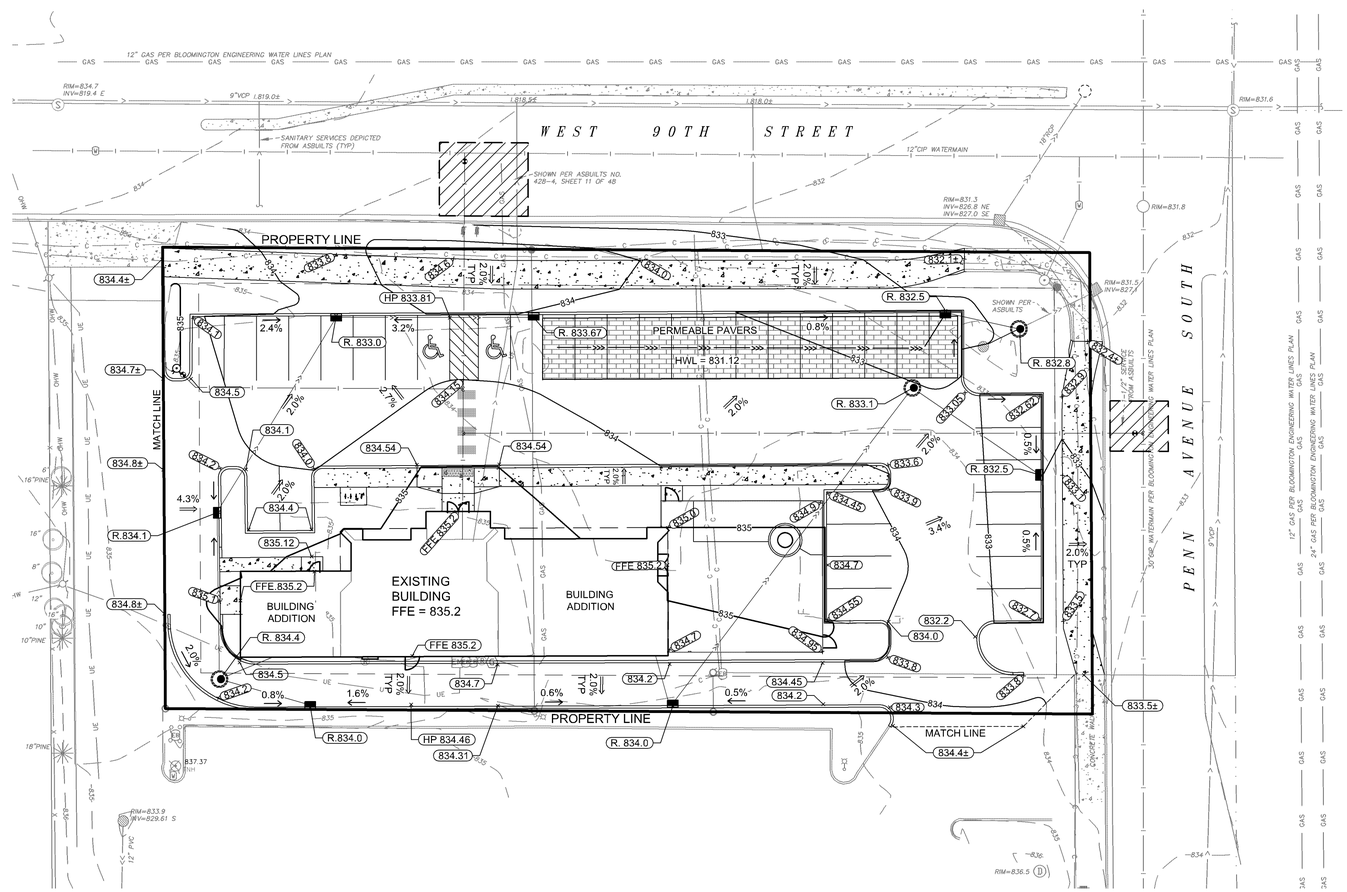

HTG architects

www.htg-architects.com

Minneapolis Tampa Bismarck

9300 Hennepin Town Road
Minneapolis, MN 55347
Tel: 952.278.8880
Fax: 952.278.8822

PROJECT

GYROPOLIS

ADDITION/REMODELING

2325 W 90TH ST
BLOOMINGTON, MINNESOTA

ISSUED SET
REVISIONS

DATE	NO.	
9/27/22	1	CITY SUBMITTAL
10/13/22	2	BOUNDARY ADJUSTMENT

I HEREBY CERTIFY THAT THIS PLAN, SPECIFICATION OR REPORT WAS PREPARED BY ME OR UNDER MY DIRECT SUPERVISION, AND THAT I AM A DULY LICENSED CIVIL ENGINEER UNDER THE LAWS OF THE STATE OF MINNESOTA

NOT FOR CONSTRUCTION

Brian Field, PE

56013 REG. NO. 10/13/2022 DATE

ANDERSON

13605 1st Avenue N. #100
Plymouth, MN 55441 | ae-mn.com
P 763.412.4000 | F 763.412.4090
Anderson Engineering of Minnesota, LLC

GRADING & DRAINAGE PLAN

DRAWN BY: BF CHECKED BY: BF

C3

16318 (AEMN)

COPYRIGHT © BY HTG ARCHITECTS

GENERAL NOTES

1. ALL CONSTRUCTION SHALL COMPLY WITH RECOMMENDATIONS OF THE SOIL ENGINEER UNLESS DIRECTED OTHERWISE.
2. ALL CONSTRUCTION SHALL COMPLY WITH THE MOST CURRENT CITY OF BLOOMINGTON CODE AND STANDARDS, AND THE 2016 EDITION OF MNDOT STANDARD CONSTRUCTION SPECIFICATIONS (INCLUDING SUPPLEMENTS) AND THE C.E.A.M. STANDARD SPECIFICATIONS-2013 EDITION UNLESS DIRECTED OTHERWISE.
3. ALL CONSTRUCTION SHALL COMPLY WITH APPLICABLE MUNICIPAL, WATERSHED DISTRICT, COUNTY, MPCA, DEPT. OF HEALTH, AND MNDOT PERMITS.
4. THE LOCATION AND TYPE OF EXISTING UTILITIES SHOWN ON THE PLANS ARE FOR GENERAL INFORMATION ONLY. THE INFORMATION IS NOT WARRANTED TO BE ACCURATE OR COMPLETE. THE CONTRACTOR, IN COOPERATION WITH THE APPROPRIATE UTILITY COMPANY OR MUNICIPALITY, IS RESPONSIBLE FOR VERIFYING THE LOCATION AND DEPTH OF ALL UNDERGROUND UTILITIES.
5. PROVIDE MINIMUM 10' HORIZONTAL & 18" VERTICAL SEPARATION OF ALL WATERMAIN CROSSINGS FROM STORM OR SANITARY SEWER.
6. ALL WATER SERVICE SHALL BE INSTALLED WITH 8' MINIMUM COVER FROM FINISHED GRADE, MAX 10 FEET.
7. HDPE PIPE CONNECTIONS INTO ALL CONCRETE STRUCTURES MUST BE MADE WITH WATER TIGHT MATERIALS UTILIZING AN A-LOK OR WATERSTOP GASKET OR BOOT, CAST-IN-PLACE RUBBER BOOT, OR APPROVED EQUAL. WHERE THE ALIGNMENT PRECLUDES THE USE OF THE ABOVE APPROVED WATERTIGHT METHODS, CONSEAL 231 WATERSTOP SEALANT, OR APPROVED EQUAL WILL ONLY BE ALLOWED AS APPROVED BY THE ENGINEER.
8. ALL NEW NON METALLIC SANITARY AND WATER SERVICE PIPE SHALL HAVE TRACER WIRE, PER SPECIFICATIONS.
9. LOCATE AND PROTECT EXISTING UTILITIES UNLESS OTHERWISE NOTED.
10. SUBSTITUTIONS FROM INFO. SHOWN HEREON SHALL BE REVIEWED AND APPROVED BY THE ENGINEER OF RECORD AND CITY ENGINEER.
11. ALL PORTIONS OF THE STORM SEWER SYSTEM LOCATED WITHIN 10 FEET OF A BUILDING OR WATER SERVICE LINE MUST BE TESTED IN ACCORDANCE WITH MINNESOTA RULES, CHAPTER 4714 , SECTION 1109.0. TESTING OF WATER AND SEWER SHALL COMPLY WITH 2013 CEAM REQUIREMENTS.
12. PVC SANITARY SEWER MUST MEET ASTM STANDARDS LISTED IN MINNESOTA RULES, CHAPTER 4714,TABLE 701.1 AND INSTALLATION STANDARD 1. FITTINGS 4 T 15 INCHES IN DIAMETER, SHALL CONFORM TO ASTM D3034, TYPE PSM, SDR 26. PIPE AND FITTINGS SHALL HAVE ELASTOMERIC GASKET JOINTS PROVIDING A WATERTIGHTS SEAL WHEN TESTED IN ACCORDANCE WITH ASTM D3212. JOINTS SEALS ARE TO BE MECHANICAL CLAMP RING TYPE, STAINLESS STEEL EXPANDING AND CONTRACTING SLEEVE NEOPRENE RIPPED GASKET FOR POSITIVE SEAL. GASKETS SHALL CONFORM TO ASTM F477.
13. HDPE STORM SEWERS MUST MEET ASTM F714 (SEE MINNESOTA RULES, CHAPTER 4714 SECTION 1102.4 AND INSTALLATION STANDARD 1). WATER TIGHT JOINTS MUST BE USED AT ALL CONNECTION INCLUDING STRUCTURES. THE INSTALLATION MUST COMPLY WITH ASTM D2321.
14. ALL COMPONENTS OF WATER SYSTEM, UP TO THE WATER METER OR FIRE SERVICE EQUIPMENT MUST UTILIZE PROTECTIVE INTERNAL COATINGS MEETING CURRENT ANSI/AWWA STANDARDS FOR CEMENT MORTAR LINING OR SPECIAL COATING. THE USE OF UNLINED OR UNCOATED PIPE IS NOT ALLOWED. PROVIDE 8 MIL POLYWRAP ON DIP WATERMAIN PER CITY STANDARDS.
15. COMBINATION FIRE AND DOMESTIC SERVICES MUST TERMINATE WITH A THREAD ON FLANGE OR AN MJ TO FLANGE ADAPTER.
16. UTILITY AND MECHANICAL CONTRACTORS MUST COORDINATE THE INSTALLATION OF ALL WATER AND SEWER SERVICE PIPES INTO THE BUILDING TO ACCOMMODATE CITY INSPECTION AND TESTING.
17. CONTRACTOR TO PROVIDE UTILITY AS-BUILTS TO CITY OF BLOOMINGTON PRIOR TO CERTIFICATE OF ACCUPANCY.

STRUCTURE SCHEDULE

STRUCTURE NUMBER	SIZE	CASTING	NOTES
OSC-1	60"-DIA	R-1642	SOLID "STORM"
CB-2	48"-DIA	R-3067	–
CBMH-3	48"-DIA	R-3067	–
CBMH-4	48"-DIA	R-3067	–
STMH-5	48"-DIA	R-1642	SOLID "STORM"
CB-6	2'X3' REC	R-3067	–
STMH-7	48" DIA	R-1642	SOLID "STORM"
CB-8	2'X3' REC	R-3067	–
CB-9	2'X3' REC	R-3067	–
CB-10	2'X3' REC	R-3067	–

KEY NOTES

1. WET TAP EXISTING 12" WATER MAIN WITH SADDLE AND 6" GATE VALVE. REMOVE EXISTING SERVICE PER CITY OF BLOOMINGTON STANDARDS.
2. INSTALL 6" GATE VALVE AND RISER BOX.
3. INSTALL 6" - HDPE INTERNAL ROOF DRAIN FOR BUILDING ADDITION. COORDINATE FINAL LOCATION AND TYPE WITH MASTER PLUMBER.
4. REMOVE AND REPLACE IN- KIND FOR UTILITY CONNECTION PROVIDE STAGE APPROPRIATE VEHICLE AND PEDESTRIAN TRAFFIC CONTROL MEASURES PER MUTCD.
5. PROTECT EXISTING SANITARY SERVICE IN PLACE.
6. ABANDONED WATER SERVICE AT MAIN PER CITY STANDARDS.
7. INSTALL 6" HYDRANT LEAD WITH GATE VALVE (10/C6)
8. WET TAP EXISTING 30" WATER MAIN WITH SADDLE AND 6" GATE VALVE.
9. INSTALL 6X6 TEE

N

0 20' 40'

LEGEND

- PROPERTY LIMITS
- EXISTING WATERMAIN
- EXISTING SANITARY SEWER
- EXISTING STORM SEWER
- PROPOSED WATERMAIN
- PROPOSED STORM SEWER
- PROPOSED STORM INLETS
- PROPOSED CONCRETE WALK
- PROPOSED BITUMINOUS ASPHALT

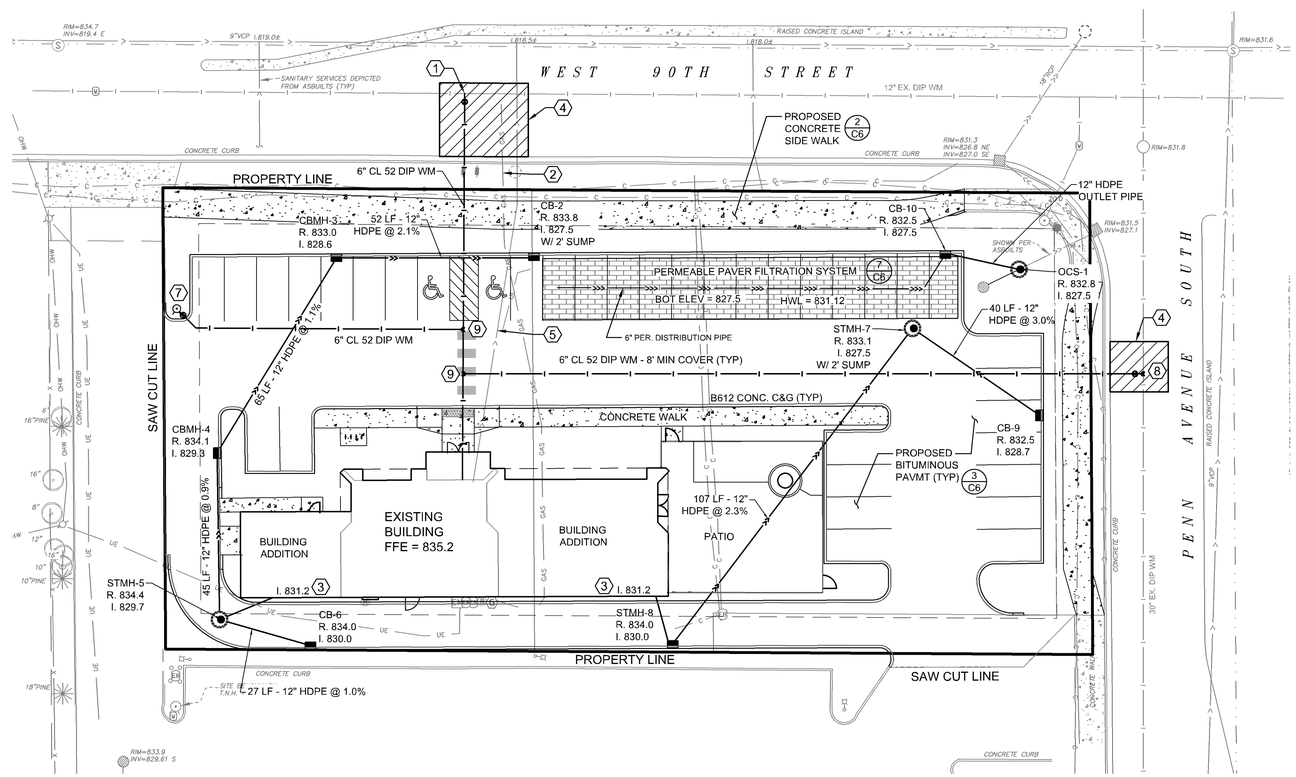

CALL 48 HOURS BEFORE DIGGING
Utilities Underground Location Center
DIAL 811
811
Know what's below, Call before you dig.

HTG architects
www.htg-architects.com
Minneapolis Tampa Bismarck
9300 Hennepin Town Road
Minneapolis, MN 55347
Tel: 952.278.8880
Fax: 952.278.8822

PROJECT

GYROPOLIS

ADDITION/REMODELING

2325 W 90TH ST
BLOOMINGTON, MINNESOTA

ISSUED SET
REVISIONS

DATE	NO.	
9/27/22	1	CITY SUBMITTAL
10/13/22	2	BOUNDARY ADJUSTMENT

I HEREBY CERTIFY THAT THIS PLAN, SPECIFICATION OR REPORT WAS PREPARED BY ME OR UNDER MY DIRECT SUPERVISION, AND THAT I AM A DULY LICENSED CIVIL ENGINEER UNDER THE LAWS OF THE STATE OF MINNESOTA

NOT FOR CONSTRUCTION
Brian Field, PE
56013 REG. NO. 10/13/2022 DATE

ANDERSON
13605 1st Avenue N. #100
Plymouth, MN 55441 | ae-mn.com
P 763.412.4000 | F 763.412.4090
Anderson Engineering of Minnesota, LLC

UTILITY & PAVING PLAN

DRAWN BY: BF CHECKED BY: BF

C4

16318 (AEMN)

COPYRIGHT © BY HTG ARCHITECTS

STORM WATER POLLUTION PREVENTION PLAN NOTES:

1. GRADING CONTRACTORS SHALL VERIFY LOCATIONS AND ELEVATIONS OF ALL UNDERGROUND UTILITIES WITH THE RESPECTIVE UTILITY COMPANIES PRIOR TO CONSTRUCTION.

2. ALL EROSION CONTROL MEASURES CALLED FOR ON THESE PLANS AND SPECIFICATIONS, WHICH MAY INCLUDE SILT FENCE, SEDIMENTATION BASINS OR TEMPORARY SEDIMENT TRAPS, SHALL BE CONSTRUCTED AND SERVICEABLE IN THE FOLLOWING ORDER:

   A. ROCK CONSTRUCTION ENTRANCES A MINIMUM OF 50 FEET
   B. SILT FENCE
   C. TEMPORARY CULVERTS
   D. TEMPORARY SEDIMENTATION BASINS AND OUTFALL FACILITIES
   E. SORMWATER POND CONSTRUCTION
   F. COMMON EXCAVATION AND EMBANKMENT (GRADING)
   G. SEED AND MULCH OR SOD
   H. BIO-ROLL BARRIERS IN FINISHED GRADED AREAS
   I. INLET AND OUTLET FACILITIES SUBSEQUENT TO STORM SEWER WORK

3. GRADING CONTRACTOR SHALL PROVIDE AND MAINTAIN ALL EROSION CONTROL MEASURES IN ACCORDANCE WITH CITY AND NPDES PHASE II PERMITTING REQUIREMENTS AS WELL. AS EROSION CONTROL MEASURES AS MAY BE SHOWN ON THESE PLANS OR SPECIFICATIONS. GRADING CONTRACTOR SHALL IMPLEMENT ANY ADDITIONAL EROSION CONTROL MEASURES AS MAY BE REQUIRED TO PROTECT ADJACENT PROPERTY.

4. ALL EROSION CONTROL FACILITIES SHALL BE MAINTAINED BY THE CONTRACTOR DURING GRADING OPERATIONS. ANY TEMPORARY FACILITIES WHICH ARE TO BE REMOVED AS CALLED FOR ON THESE PLANS AND SPECIFICATIONS SHALL BE REMOVED BY THE GRADING CONTRACTOR WHEN DIRECTED BY THE ENGINEER. THE GRADING CONTRACTOR SHALL RESTORE THE SUBSEQUENTLY DISTURBED AREA IN ACCORDANCE WITH THESE PLANS AND SPECIFICATIONS.

5. THE GRADING CONTRACTOR SHALL SCHEDULE THE SOILS ENGINEER SO THAT CERTIFICATION OF ALL CONTROLLED FILLS WILL BE FURNISHED TO THE OWNER DURING AND UPON COMPLETION OF THE PROJECT.

6. ALL DISTURBED AREAS, EXCEPT AREAS TO BE PAVED AND/OR SPECIFICALLY DESIGNED BY A LANDSCAPE PLAN, SHALL BE COVERED WITH A MINIMUM 6" OF TOP SOIL OR AS INDICATED IN SPECIFICATIONS OR LANDSCAPING PLAN. ALL DISTURBED AREAS SHALL BE SEEDED & MULCHED AT THE PRESCRIBED RATES WITHIN 72 HOURS OF FINAL GRADING UNLESS OTHERWISE NOTED.

   SEED MIX: MNDOT NO. 25-141 59# / ACRE
   MULCH: TYPE 1 2 TONS / ACRE (DISK ANCHORED)
   FERTILIZER: TYPE 3 22-5-10 350# / ACRE

   ALL EXPOSED SOIL AREAS WITH A CONTINUOUS POSITIVE SLOPE WITHIN 200 LINEAL FEET OF ANY SURFACE WATER, MUST HAVE TEMPORARY EROSION PROTECTION OR PERMANENT COVER FOR THE EXPOSED SOIL AREAS YEAR ROUND, ACCORDING TO THE FOLLOWING TABLE OF SLOPES AND TIME FRAMES:

   TYPE OF SLOPE **TIME** (Maximum time an area can remain open when the area is not actively being worked)
   STEEPER THAN 3:1 7 DAYS
   10:1 TO 3:1 4 DAYS
   FLATTER THAN 10:1 21 DAYS

7. THE EXISTING TOPOGRAPHY AND CONTOUR ELEVATIONS SHOWN ON THE PLAN WERE TAKEN FROM A PLAN FURNISHED BY OWNER.

8. CONTRACTORS GRADING AND EROSION CONTROL OPERATIONS SHALL TAKE PLACE WITHIN THE CONSTRUCTION LIMITS.

9. IT IS REQUIRED THAT SOILS TRACKED FROM THE SITE BY MOTOR VEHICLES BE CLEANED DAILY FROM PAVED ROADWAY SURFACES THROUGHOUT THE DURATION OF CONSTRUCTION.

10. PROVIDE TEMPORARY SEDIMENTATION BASINS AS DIRECTED BY THE ENGINEER.

11. ALL REQUIREMENTS OF THE LOCAL WATERSHED DISTRICT SHALL BE SATISFIED PER THE APPROVED PERMIT.

12. ALL EROSION & SEDIMENT CONTROL MEASURES SHOWN ON THIS PLAN AND IMPLEMENTED IN THE FIELD AS DIRECTED BY THE ENGINEER SHALL CONFORM TO THE MPCA'S "PROTECTING WATER QUALITY IN URBAN AREAS: BEST MANAGEMENT PRACTICES FOR MINNESOTA".

13. DEWATERING AND / OR BASIN DRAINING DISCHARGE SHALL BE DIRECTED TO SEDIMENTATION BASINS WHEREVER POSSIBLE. ALL DISCHARGE POINTS SHALL BE ADEQUATELY PROTECTED FROM EROSION & SCOUR THROUGH USE OF APPROVED ENERGY DISSIPATION DEVICES.

14. ALL SOLID WASTE / CONSTRUCTION DEBRIS SHALL BE DISPOSED OF IN ACCORDANCE WITH MPCA REQUIREMENTS. HAZARDOUS MATERIALS SHALL BE STORED / DISPOSED OF IN COMPLIANCE WITH MPCA REGULATIONS.

15. CONTRACTOR SHALL USE RAPID STABILIZATION METHODS PER MNDOT 2575 AS NEEDED DURING THE COURSE OF THE WORK TO MAINTAIN CONFORMANCE WITH THE CITY AND NPDES II PERMIT REQUIREMENTS. THIS WORK SHALL CONSIST OF OPERATIONS NECESSARY TO RAPIDLY STABILIZE SMALL CRITICAL AREA, TO PREVENT OFF SITE SEDIMENTATION AND / OR TO COMPLY WITH PERMIT REQUIREMENTS. THE WORK MAY BE PERFORMED AT ANY TIME DURING THE CONTRACT AND DURING NORMAL WORKING HOURS. THIS WORK WILL BE CONDUCTED ON SMALL AREAS THAT MAY OR MAY NOT BE ACCESSIBLE WITH NORMAL EQUIPMENT. THIS WORK SHALL BE DONE IN ACCORDANCE WITH THE APPLICABLE MNDOT STANDARDS SPECIFICATIONS, THE DETAILS SHOWN IN THE PLANS, AND THE FOLLOWING:

    THERE ARE FIVE STABILIZATION METHODS APPROVED FOR THESE OPERATIONS. THESE METHODS MAY BE CONDUCTED INDEPENDENTLY OR IN COMBINATION.

    METHOD **RAPID STABILIZATION**
    1 TYPE 1 MULCH WITH DISC ANCHORING
    2 TYPE 3 MULCH WITH TYPE HYDRAULIC MULCH
    3 TYPE HYDRAULIC MULCH WITH SEED MIXTURE 22-11
    4 CATEGORY 3 EROSION CONTROL BLANKET WITH SEED MIXTURE
    5 RIPRAP CLASS II WITH GEOTEXTILE TYPE III

    THESE EFFORTS WILL BE INCIDENTAL TO THE EROSION CONTROL BID ITEM.

16. CHANGE OF COVERAGE: FOR STORM WATER DISCHARGES FROM CONSTRUCTION PROJECTS WHERE THE OWNER OR OPERATOR CHANGES, (E.G., AN ORIGINAL DEVELOPER SELLS PORTIONS OF THE PROPERTY TO VARIOUS BUILDERS) THE NEW OWNER OR OPERATOR MUST SUBMIT A SUBDIVISION REGISTRATION WITHIN 7 DAYS OF ASSUMING TRANSFERS, SALE OR CLOSING ON THE PROPERTY.

17. INDIVIDUAL SITE BUILDERS SHALL BE RESPONSIBLE FOR PROVIDING ANY AND ALL NECESSARY EROSION CONTROL MEASURES AS MAY BE REQUIRED. REQUIRED ECM'S SHALL CONSIST OF BUT NOT BE LIMITED TOT HE FOLLOWING:

    A. STAKED FIBER LOG ROLLS AT BACK OF ALL CURB EXCEPT AT CONSTRUCTION / DRIVEWAY ENTRANCE.
    B. SILT FENCE ON ALL DOWN GRADIENT SLOPES FROM CONSTRUCTION AREA. SILT FENCE SHALL HAVE THE BOTTOM DUG IN WITH SOIL FIRMLY COMPACTED.
    C. ROCK CONSTRUCTION ENTRANCE HAVING 1" TO 2" CLEAR ROCK OVER GEOTEXTILE FABRIC.
    D. STREET CLEANING AS MAY BE REQUIRED SHOULD VEHICLE TRACKING OCCUR.

    INDIVIDUAL SITE BUILDERS ARE REQUIRED TO MAINTAIN ECM'S UNTIL SUCH TIME AS INDIVIDUAL YARDS/VEGETATION ARE ESTABLISHED.

18. CONTRACTOR SHALL PROVIDE A TEMPORARY SEDIMENTATION BASIN ON SITE FOR CONSTRUCTION WASH OUT USE. TEMPORARY BASIN SHALL BE LOCATED AS TO PROVIDE EASY ACCESS FOR CONSTRUCTION VEHICLES AND CONCRETE TRUCKS AS NECESSARY.

19. INLET SEDIMENTATION CONTROL IS TO BE PROVIDED TO ALL STORM SEWER CATCH BASIN THROUGHOUT CONSTRUCTION . MEASURES APPLIED SHALL COMPLY WITH BEST MANAGEMENT PRACTICES FOR MINNESOTA AND APPLICATION OF NPDES PHASE II AS APPROPRIATE FOR PHASE OF CONSTRUCTION.

20. CONTRACTOR SHALL PREVENT SOIL LOSS DURING CONSTRUCTION DUE TO WIND EROSION THROUGHOUT CONSTRUCTION. DUST SHALL BE SUPPRESSED THOUGH THE APPLICATIONS OF WATER, AS DEEMED NECESSARY BY THE CONTRACTOR, OR THROUGH EQUIVALENT BMP'S AS APPROVED BY THE ENGINEER.

21. IF LEED ACCREDITATION IS APPLICABLE, CONTRACTOR SHALL DOCUMENT THE IMPLEMENTATION OF THE EROSION AND SEDIMENTATION CONTROL PLAN THROUGH DATE-STAMPED PHOTOS AND INSPECTION LOGS / REPORTS. REPORTS SHALL INCLUDE AT A MINIMUM DESCRIPTION OF ALL EMPLOYED BMP'S (INCLUDING BOTH MEASURES TO PREVENT SOIL LOSS DUE TO RUNOFF AND SOIL LOSS DUE TO WIND EROSION), BMP'S DEEMED UNNECESSARY DUE TO SITE CONDITIONS, CORRECTIVE ACTIONS TAKEN IN RESPONSE TO PROBLEMS, AND ANY ADDITIONAL INFORMATION RELEVANT TO THE CONDITION OF THE EROSION AND SEDIMENT CONTROL PLAN AS IT WAS ESTABLISHED AT THE TIME OF CONSTRUCTION.

STORMWATER POLLUTION PREVENTION PLAN SCHEDULE OF INSTALLATION & MAINTENANCE

ITEM	INSTALLATION	INSPECTION & MAINTENANCE	REMOVAL
SILT FENCE	PRIOR TO COMMENCEMENT OF EARTHWORK OPERATIONS.	INSPECT & MAINT. AFTER EACH RUN-OFF EVENT. REMOVE SEDIMENTS AS REQUIRED.	AFTER TRIBUTARY DRAINAGE AREA IS RESTORED.
ROCK CONST. ENTRANCE	PRIOR TO COMMENCEMENT OF EARTHWORK OPERATIONS.	INSPECT REGULARLY. MAINTAIN AS NEEDED.	PRIOR TO PAVING.
INLET PROTECTION	UPON INLET CONSTRUCTING	WHEN 1/3 CAPACITY OF BMP IS REACHED	AFTER TRIBUTARY AREAS ARE FULLY RESTORED

KEY NOTES

1. INSTALL AND MAINTAIN SILT FENCE PERIMETER SEDIMENT PROTECTION IN TURF AREAS. USE BIO-ROLLS AS NEEDED IN PAVED AREAS FOR PHASING PURPOSES. (3/C5)
2. INSTALL AND MAINTAIN SEDIMENT PROTECTION. (2/C5)
3. INSTALL TEMPORARY ROCK ENTRANCE AT ALL CONSTRUCTION INGRESS AND EGRESS LOCATIONS PRIOR TO EXCAVATION AND TO BE MAINTAINED THROUGHOUT THE ENTIRE CONSTRUCTION PROCESS. (1/C5)
4. INSTALL SEDIMENT CONTROL LOG PER MNDOT SPECIFICATION SECTION 2573.

GENERAL NOTES

1. CONTRACTOR IS RESPONSIBLE FOR INSTALLATION, MAINTENANCE AND REMOVAL OF ALL APPLICABLE EROSION & SEDIMENT CONTROL ITEMS.
2. SPECIFIED EROSION/SEDIMENT CONTROL MEASURES ARE THE MINIMUM. ADDITIONAL PRACTICES MAY BE REQUIRED DURING THE COURSE OF CONSTRUCTION.
3. THE TOTAL DISTURBED AREA IS EQUAL TO 0.80 ACRES. THIS IS BELOW THE 1.0 ACRE THRESHOLD, AND THEREFORE AN MPCA PERMIT IS NOT REQUIRED.

LEGEND

- PROPERTY LIMITS
- CONSTRUCTION LIMITS
- 966 — EXISTING MINOR CONTOUR
- 965 — EXISTING MAJOR CONTOUR
- 966 — PROPOSED MINOR CONTOUR
- 965 — PROPOSED MAJOR CONTOUR
- DRAINAGE ARROW
- SF — SILT FENCE
- INLET SEDIMENT PROTECTION
- ROCK CONSTRUCTION ENTRANCE

N

0 20' 40'

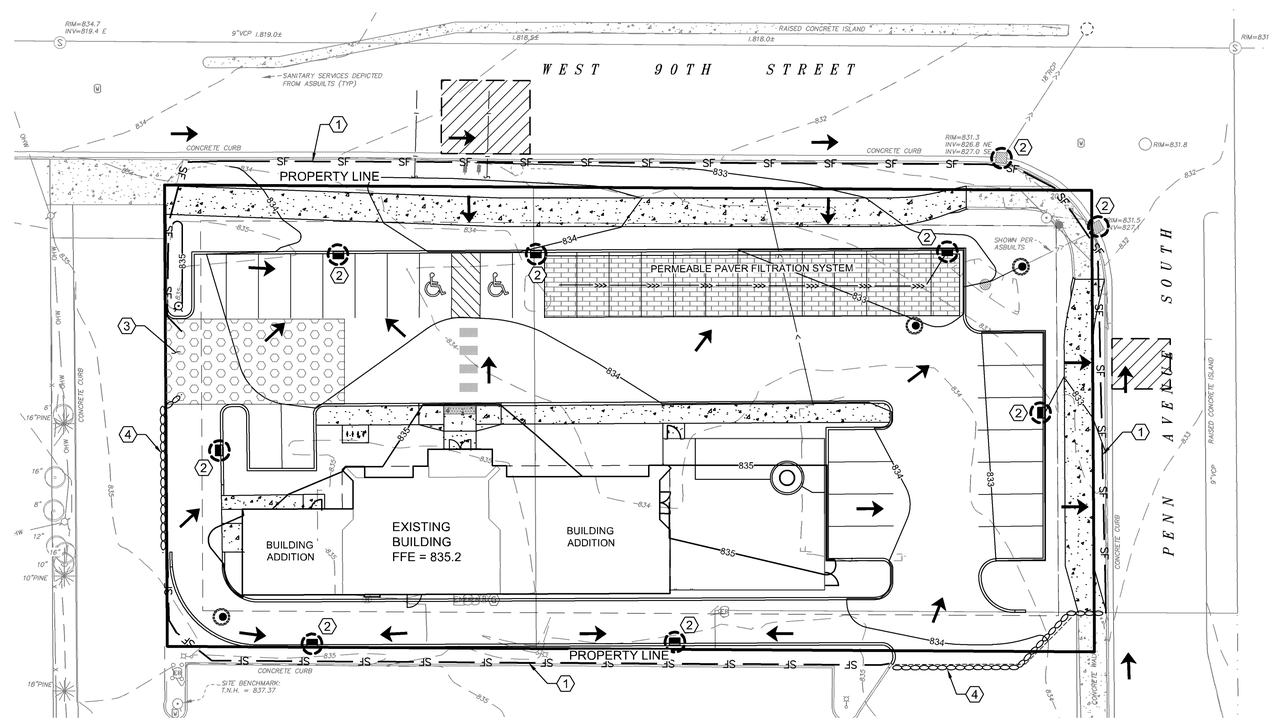

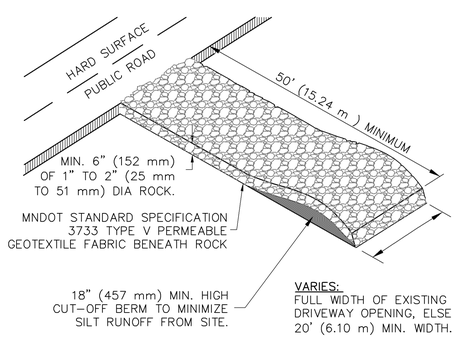

1 ROCK CONSTRUCTION ENTRANCE DETAIL
SCALE: N.T.S.

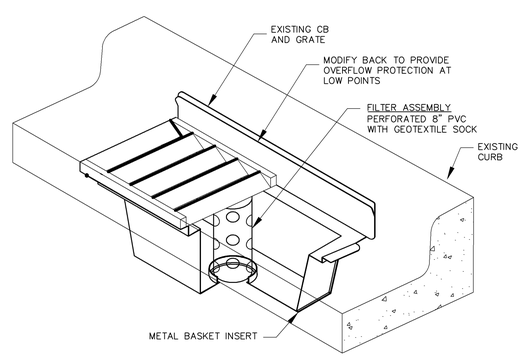

2 INLET PROTECTION DETAIL
SCALE: N.T.S.

NOTES:
- PLACE BOTTOM EDGE OF FENCE INTO 6" (153 mm) DEEP TRENCH AND BACKFILLED IMMEDIATELY.
- POSTS SHALL BE:
  - 4' (1.22 m) ON CENTER
  - 2" (50.8 mm) X 2" (50.8 mm) HARDWOOD, PINE OR STEEL FENCE POSTS. MINIMUM LENGTH 4.5'
  - DRIVEN 2' (0.61 m) INTO THE GROUND.

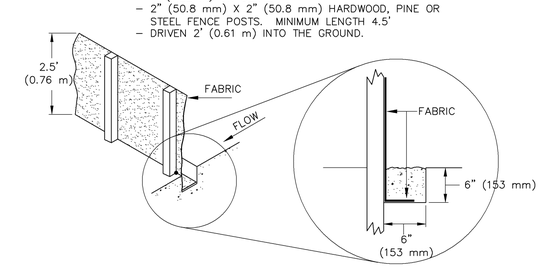

3 SILT FENCE INSTALLATION DETAIL
SCALE: N.T.S.

HTG architects
www.htg-architects.com
Minneapolis Tampa Bismarck

9300 Hennepin Town Road
Minneapolis, MN 55347
Tel: 952.278.8880
Fax: 952.278.8822

PROJECT

GYROPOLIS

ADDITION/REMODELING

2325 W 90TH ST
BLOOMINGTON, MINNESOTA

ISSUED SET
REVISIONS

DATE	NO.	
9/27/22	1	CITY SUBMITTAL
10/13/22	2	BOUNDARY ADJUSTMENT

I HEREBY CERTIFY THAT THIS PLAN, SPECIFICATION OR REPORT WAS PREPARED BY ME OR UNDER MY DIRECT SUPERVISION, AND THAT I AM A DULY LICENSED CIVIL ENGINEER UNDER THE LAWS OF THE STATE OF MINNESOTA

NOT FOR CONSTRUCTION

Brian Field, PE

56013 10/13/2022
REG. NO. DATE

ANDERSON
13605 1st Avenue N. #100
Plymouth, MN 55441 | ae-mn.com
P 763.412.4000 | F 763.412.4090
Anderson Engineering of Minnesota, LLC

EROSION & SEDIMENT CONTROL PLAN

DRAWN BY: BF CHECKED BY: BF

C5

16318 (AEMN)

COPYRIGHT © BY HTG ARCHITECTS

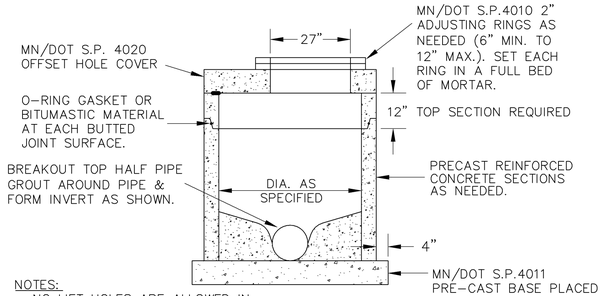

NOTES:
- NO LIFT HOLES ARE ALLOWED IN MANHOLES LESS THAN 60" IN DIA.
- FOR MH'S IN DRIVE LANES, ROTATE COVER SO THAT CASTING IS OUT OF WHEEL PATH, AS APPROVED.

1 STANDARD MANHOLE DETAIL
SCALE: N.T.S.

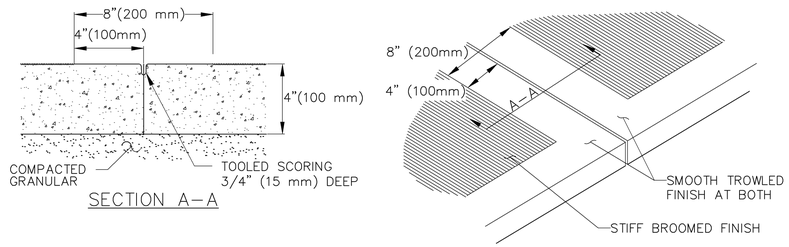

2 CONCRETE WALK SECTION DETAIL
SCALE: N.T.S.

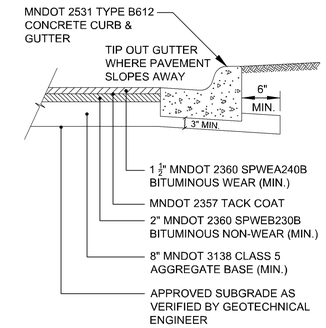

3 BITUMINOUS PAVEMENT SECTION
SCALE: N.T.S.

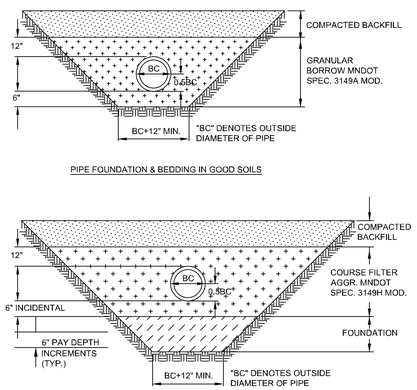

4 PVC OR HDPE PIPE BEDDING
SCALE: N.T.S.

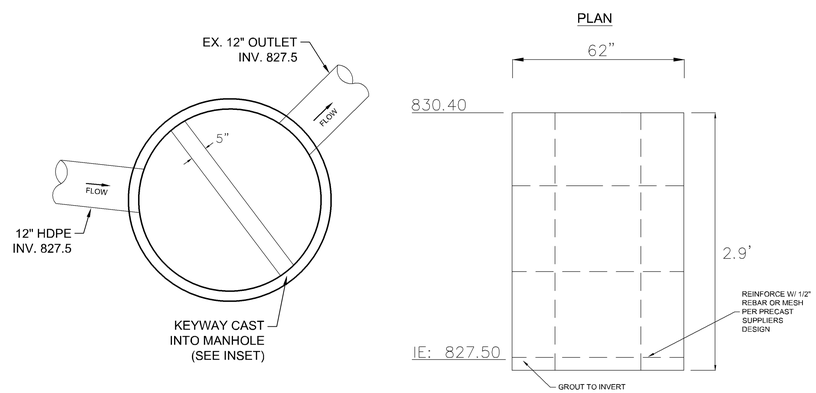

5 OUTLET CONTROL STRUCTER - 1 DETAIL
SCALE: N.T.S.

- HYDRANT TO BE:
  - WATEROUS PACER CLASSIC.
  - MUELLER SUPERCENTURION 250 MODEL A-423.
  - OR APPROVED EQUAL.
- EQUIP WITH THREE HOSE NOZZLES/CONNECTIONS AS FOLLOWS:
  - ONE – FACTORY INSTALLED 5 INCH STORZ-TYPE, QUARTER TURN PUMPER NOZZLE/CONNECTOR, INCLUDING A MANUFACTURER SUPPLIED AND INSTALLED ANODIZED ALUMINUM NOZZLE CAP WITH A 1.5 INCH PENTAGON NUT AND NO ROCKER LUG.
  - TWO – 2.5 INCH HOSE NOZZLES/CONNECTIONS (WITH NATIONAL STANDARD THREADS) AND STANDARD NOZZLE CAPS WITH 1.5 INCH PENTAGON NUTS, AND NO ROCKER LUGS.
- USE SS NUTS AND BOLTS AS APPROVED BY THE ENGINEER.
- ALL EXPOSED WATERMAIN SHALL BE WRAPPED WITH POLYETHYLENE IN ACCORDANCE WITH AWWA C-105.
- BARREL TO BE BRIGHT RED.
- ALL VALVES TO OPEN COUNTER-CLOCKWISE.
- SEE TYPICAL VALVE INSTALLATION DETAIL FOR VALVE DETAILS.
- WATEROUS PACER CLASSIC HYDRANTS SHALL INCLUDE INSTALLATION OF THE MANUFACTURERS MOST CURRENT ANTI-CHATTER BRASS UPPER VALVE WASHER.

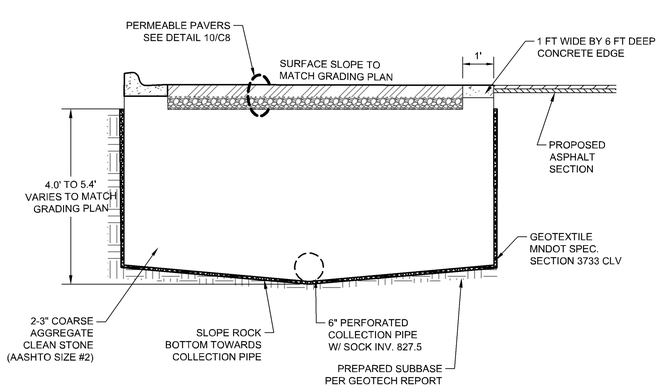

7 PERMEABLE INFILTRATION SECTION
SCALE: N.T.S.

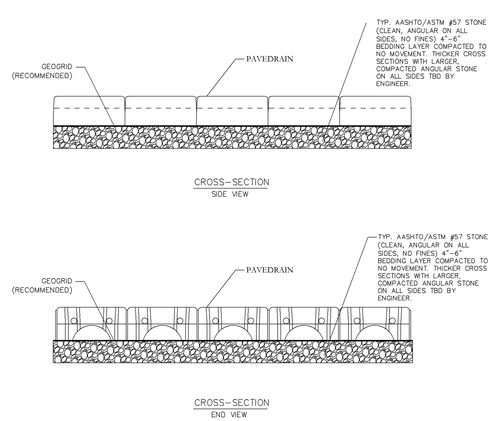

8 PERMEABLE PAVER SECTION
SCALE: N.T.S.

INSTALLATION NOTES

1. **EXISTING SUBGRADE UNDER BED AREAS SHALL NOT BE SUBJECT TO EXCESSIVE CONSTRUCTION EQUIPMENT TRAFFIC PRIOR TO GEOTEXTILE AND STONE BED PLACEMENT.**
2. **BRING SUBGRADE OF STONE INFILTRATION BED TO LINE, GRADE, AND ELEVATION INDICATED. FILL AND LIGHTLY REGRADE ANY AREAS DAMAGED BY EROSION, PONDING, OR TRAFFIC COMPACTION BEFORE PLACING OF STONE. TRANSVERSE SUBGRADE SLOPE TO BE 1.0% MIN, SEE GRADING PLAN FOR LONGITUDINAL SUBGRADE SLOPE.**
3. **PLACE GEOTEXTILE IN ACCORDANCE WITH MANUFACTURER'S STANDARDS AND RECOMMENDATIONS. ADJACENT TRIPS OF GEOTEXTILE SHALL OVERLAP A MINIMUM OF 16-INCHES. SECURE GEOTEXTILE AT LEAST FOUR (4) FEET OUTSIDE OF BED AND TAKE ANY STEPS NECESSARY TO PREVENT ANY RUNOFF OR SEDIMENT FROM ENTERING THE STORAGE BED.**
4. **INSTALL COURSE AGGREGATE IN 8-INCH MAXIMUM LIFTS. LIFTS OF 12-INCHES ARE ALLOWED OVER PIPE TO PREVENT DAMAGE. LIGHTLY COMPACT EACH LAYER WITH EQUIPMENT, KEEPING EQUIPMENT MOVEMENT OVER STORAGE BED SUBGRADES TO A MINIMUM. INSTALL AGGREGATE TO GRADES INDICATED ON DRAWINGS.**
5. **INSTALL STABILIZER BASE COURSE AGGREGATE EVENLY OVER SURFACE OF STONE BED, SUFFICIENT TO ALLOW PLACEMENT OF PAVEMENT, AND NOTIFY ENGINEER FOR APPROVAL.**
6. **FOLLOWING PLACEMENT OF BED AGGREGATE, THE GEOTEXTILE SHALL BE FOLDED BACK ALONG ALL BED EDGES TO PROTECT FROM SEDIMENT WASHOUT ALONG BED EDGES. AT LEAST A FOUR (4) FOOT EDGE STRIP SHALL BE USED TO PROTECT BEDS FROM ADJACENT BARE SOIL. THIS EDGE STRIP SHALL REMAIN IN PLACE UNTIL ALL BARE SOILS CONTIGUOUS TO BEDS ARE STABILIZED AND VEGETATED. IN ADDITION, TAKE ANY OTHER NECESSARY STEPS TO PREVENT SEDIMENT FROM WASHING INTO BEDS DURING SITE DEVELOPMENT. WHEN THE SITE IS FULLY STABILIZED, TEMPORARY SEDIMENT CONTROL DEVICES SHALL BE REMOVED.**

9 PERMEABLE PAVER NOTES
SCALE: N.T.S.

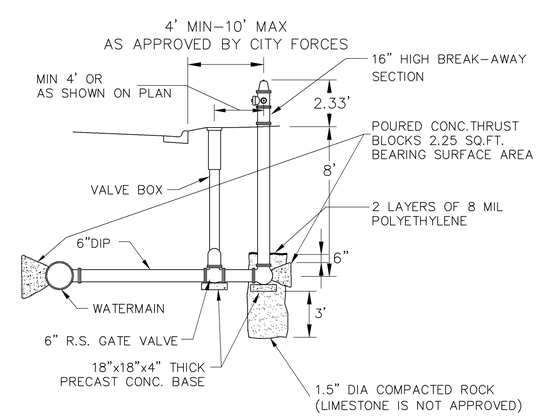

10 HYDRANT INSTALLATION DETAIL
SCALE: N.T.S.

HTG architects
www.htg-architects.com
Minneapolis Tampa Bismarck

9300 Hennepin Town Road
Minneapolis, MN 55347
Tel: 952.278.8880
Fax: 952.278.8822

PROJECT

GYROPOLIS

ADDITION/REMODELING

2325 W 90TH ST
BLOOMINGTON, MINNESOTA

ISSUED SET
REVISIONS

DATE	NO.	
9/27/22	1	CITY SUBMITTAL
10/13/22	2	BOUNDARY ADJUSTMENT

I HEREBY CERTIFY THAT THIS PLAN, SPECIFICATION OR REPORT WAS PREPARED BY ME OR UNDER MY DIRECT SUPERVISION, AND THAT I AM A DULY LICENSED CIVIL ENGINEER UNDER THE LAWS OF THE STATE OF MINNESOTA

NOT FOR CONSTRUCTION

Brian Field, PE

56013 — 10/13/2022
REG. NO. — DATE

ANDERSON
13605 1st Avenue N. #100
Plymouth, MN 55441 | ae-mn.com
P 763.412.4000 | F 763.412.4090
Anderson Engineering of Minnesota, LLC

CIVIL DETAILS

DRAWN BY: BF CHECKED BY: BF

C6

16318 (AEMN)

COPYRIGHT © BY HTG ARCHITECTS