CASE FILE #PL201700223

verizon

SITE NAME: MIN LR 28TH AVE SC1

SITE NUMBER: 20161462527

APPROVED
ZONING
NMJ 01/03/2018

LOCATION CODE: 425930

SITE TYPE: SMALL CELL

INSTALLATION TYPE: REPLACEMENT 30' LIGHT POLE

SITE INFORMATION

APPROXIMATE ADDRESS:
28TH AVENUE SOUTH AND
EAST 82ND STREET
BLOOMINGTON, MINNESOTA 55425
HENNEPIN COUNTY

SITE COORDINATES:
LAT: 44°-51'-18.75"N
LONG: 93°-13'-54.27"W
GROUND ELEVATION: 813.0' AMSL
(PER 1A CERTIFICATE)

POLE HEIGHT:
30'-0" T.O.C.

MAXIMUM APPURTENANCE HEIGHT:
32'-0" A.G.L.

AREA MAP

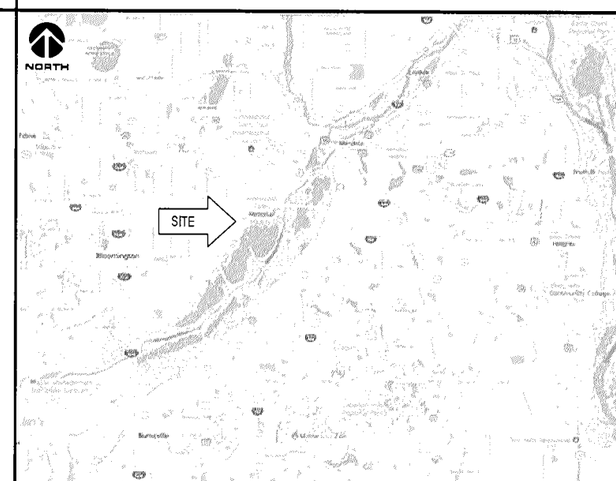

APPLICABLE CODES

ALL WORK SHALL COMPLY WITH THE FOLLOWING APPLICABLE CODES:

- 2012 INTERNATIONAL BUILDING CODE
- 2014 NATIONAL ELECTRIC CODE
- TIA/EIA-222-G OR LATEST EDITION

IN THE EVENT OF CONFLICT, THE MOST RESTRICTIVE CODE SHALL PREVAIL

LOCATION MAP

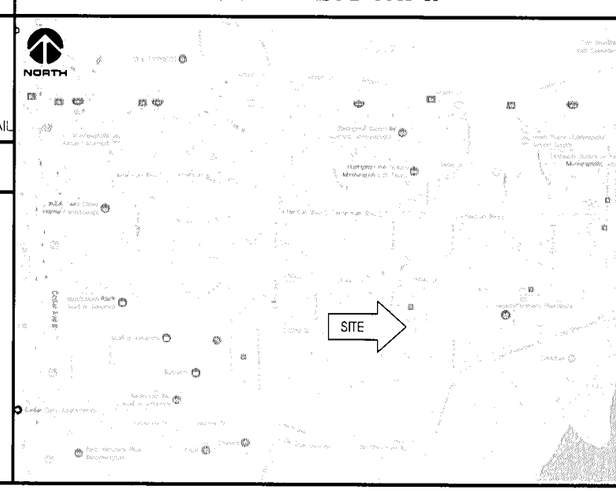

LOCATION SCAN

PROJECT DESCRIPTION/SOW

- INSTALL (1) REPLACEMENT 30-FT STEEL LIGHT POLE AND ASSOCIATED CONCRETE FOUNDATION
- INSTALLATION OF (2) PANEL ANTENNAS
- INSTALLATION OF ERICSSON RRU'S AND POWER CONVERTERS
- INSTALLATION OF (1) LOAD CENTER
- INSTALLATION OF (4) HYBRID COUPLERS
- INSTALLATION OF HAND HOLE FOR FIBER AT POLE BASE BY PROVIDER
- INSTALLATION OF CONDUIT FOR FIBER BETWEEN HAND HOLE AND POLE BASE BELOW GRADE BY VERIZON
- INSTALLATION OF CONDUIT FOR FIBER BETWEEN HAND HOLE AND ROW BELOW GRADE BY PROVIDER
- INSTALLATION OF GROUND RODS AROUND POLE FOUNDATION
- INSTALLATION OF CONDUIT FOR NEW ELECTRIC SERVICES BY VERIZON
- INSTALLATION OF PROPOSED ELECTRICAL METER BY VERIZON
- ALL OTHER CONSTRUCTION RELATED ACTIVITIES TO BE COMPLETED BY OTHERS

SHEET INDEX

NO:	SHEET TITLE
G-001	TITLE SHEET & PROJECT DATA
G-002	GENERAL SPECIFICATIONS
G-003	GENERAL SPECIFICATIONS
G-004	METRO TRANSIT SITE REQUIREMENTS*
G-005	METRO TRANSIT SITE REQUIREMENTS*
C-101	SITE PLAN
C-102	ENLARGED SITE PLAN
T-201	SITE ELEVATION
T-501	ANTENNA DETAILS
T-502	EQUIPMENT DETAILS
S-001	STRUCTURAL NOTES **
S-501	STRUCTURAL DETAILS **
E-101	UTILITY PLAN
E-102	GROUNDING PLAN
E-601	UTILITY DETAILS
E-602	UTILITY DETAILS
E-603	GROUNDING DETAILS

* COMPLETED BY OTHERS
** REVIEWED AND APPROVED BY STRUCTURAL ENGINEER

PROJECT DIRECTORY

LESSEE:
VERIZON WIRELESS
10801 BUSH LAKE RD
BLOOMINGTON, MN 55438
CONTACT: COURTNEY BEDNARZ
PHONE: 952.946.4694

RF ENGINEER:
VERIZON WIRELESS
10801 BUSH LAKE RD
BLOOMINGTON, MN 55438
CONTACT: JOHN MULLINS
PHONE: 612.791.1710

SITE ACQUISITION:
KE CONSULTING, LLC
3101 GRANDVIEW BLVD
MADISON, WI 53713
CONTACT: KIM A. EGAN
PHONE: 608.516.0233

ENGINEERING COMPANY:
EDGE CONSULTING ENGINEERS, INC.
2101 HIGHWAY 13 W
BURNSVILLE, MN 55337
CONTACT: OTTO DINGFELDER III, P.E.
PHONE: 608.644.1449

LESSOR:
METRO TRANSIT
560 SIXTH AVENUE NORTH
MINNEAPOLIS, MN 55411
PHONE: 612.373.3333

11"x17" PLOT WILL BE HALF SCALE UNLESS OTHERWISE NOTED

CONTRACTOR SHALL VERIFY ALL PLANS AND EXISTING DIMENSIONS/CONDITIONS ON SITE. IMMEDIATELY NOTIFY ENGINEER OF ANY DISCREPANCIES PRIOR TO PERFORMING ANY WORK OR BE RESPONSIBLE FOR THE SAME.

ENGINEER OF RECORD

EDGE CONSULTING ENGINEERS, INC.
CONTACT: OTTO DINGFELDER III (PE # 49720 (MN))
PHONE: 608.644.1449

STRUCTURAL REVIEW

COMPLETED BY:
EDGE CONSULTING ENGINEERS, INC.
PROJECT #: 14967
DATE: 09/19/2017

CONTRACTOR TO REVIEW STRUCTURAL REPORT IN ITS ENTIRETY. ANY DISCREPANCIES OR DISAGREEMENTS BETWEEN THE REPORT AND THESE PLANS SHOULD BE RESOLVED PRIOR TO CONSTRUCTION.

verizon

ke consulting LLC
3101 Grandview Blvd
Madison, WI 53713
608.516.0233

Edge
Consulting Engineers, Inc.
2101 Highway 13 W
Burnsville, MN 55337
608.644.1449 voice
608.644.1549 fax
www.edgeconsult.com

PROJECT NO:	20161462527
LOCATION CODE:	425930
EDGE PROJECT NO:	14967
CHECKED BY:	OGD

REV.	DATE	DESCRIPTION	INT.
A	06/22/2017	PRELIM SMALL CELL DWGS	NAT
B	08/01/2017	PRELIM SMALL CELL DWGS	TTB
C	08/17/2017	PRELIM SMALL CELL DWGS	TTB
0	09/19/2017	FINAL DWGS	DGS

OTTO G. DINGFELDER III
LICENSED PROFESSIONAL ENGINEER
49720
STATE OF MINNESOTA
9/20/2017

I HEREBY CERTIFY THAT THIS PLAN, SPECIFICATION, OR REPORT WAS PREPARED BY ME OR UNDER MY DIRECT SUPERVISION AND THAT I AM A DULY LICENSED PROFESSIONAL ENGINEER UNDER THE LAWS OF THE STATE OF MINNESOTA.

MIN LR 28TH AVE SC1
BLOOMINGTON, MN
REPLACEMENT LIGHT POLE
SMALL CELL DRAWINGS

SHEET TITLE
TITLE SHEET & PROJECT DATA

SHEET NUMBER
G-001

L:\14900\14967\CAD\Plot\CDs\G-001.dgn

© EDGE CONSULTING ENGINEERS, INC.

A AERIAL OVERVIEW

B SITE OVERVIEW [LOOKING NORTHWEST]

C EXISTING POWER SOURCE

CASE FILE #PL201700223
APPROVED
ZONING REVIEW ONLY
NMJ 01/03/2018

verizon

ke consulting LLC
3101 Grandview Blvd
Madison, WI 53713
608.516.0233

Edge
Consulting Engineers, Inc.
2101 Highway 13 W
Burnsville, MN 55337
608.644.1449 voice
608.644.1549 fax
www.edgeconsult.com

PROJECT NO:	20161462527
LOCATION CODE:	425930
EDGE PROJECT NO:	14967
CHECKED BY:	OGD

REV.	DATE	DESCRIPTION	INT.
A	06/22/2017	PRELIM SMALL CELL DWGS	NAT
B	08/01/2017	PRELIM SMALL CELL DWGS	TTB
C	08/17/2017	PRELIM SMALL CELL DWGS	TTB
0	09/19/2017	FINAL DWGS	DGS

- APPROVED -
SEE SHEET G-001 FOR ENGINEER SEAL

I HEREBY CERTIFY THAT THIS PLAN, SPECFICATION, OR REPORT WAS PREPARED BY ME OR UNDER MY DIRECT SUPERVISION AND THAT I AM A DULY LICENSED PROFESSIONAL ENGINEER UNDER THE LAWS OF THE STATE OF MINNESOTA.

MIN LR 28TH AVE SC1
BLOOMINGTON, MN
REPLACEMENT LIGHT POLE
SMALL CELL DRAWINGS

SHEET TITLE
SITE PLAN

SHEET NUMBER
C-101

L:\14900\14967\CAD\Plot\CDs\C-101.dgn

© EDGE CONSULTING ENGINEERS, INC.

CASE FILE #PL201700223

APPROVED
ZONING REVIEW ONLY
NMJ 01/03/2018

A — **SITE OVERVIEW [LOOKING NORTHWEST]**

B — **SITE OVERVIEW [LOOKING SOUTHWEST]**

C — **PROPOSED HAND HOLE LOCATION**

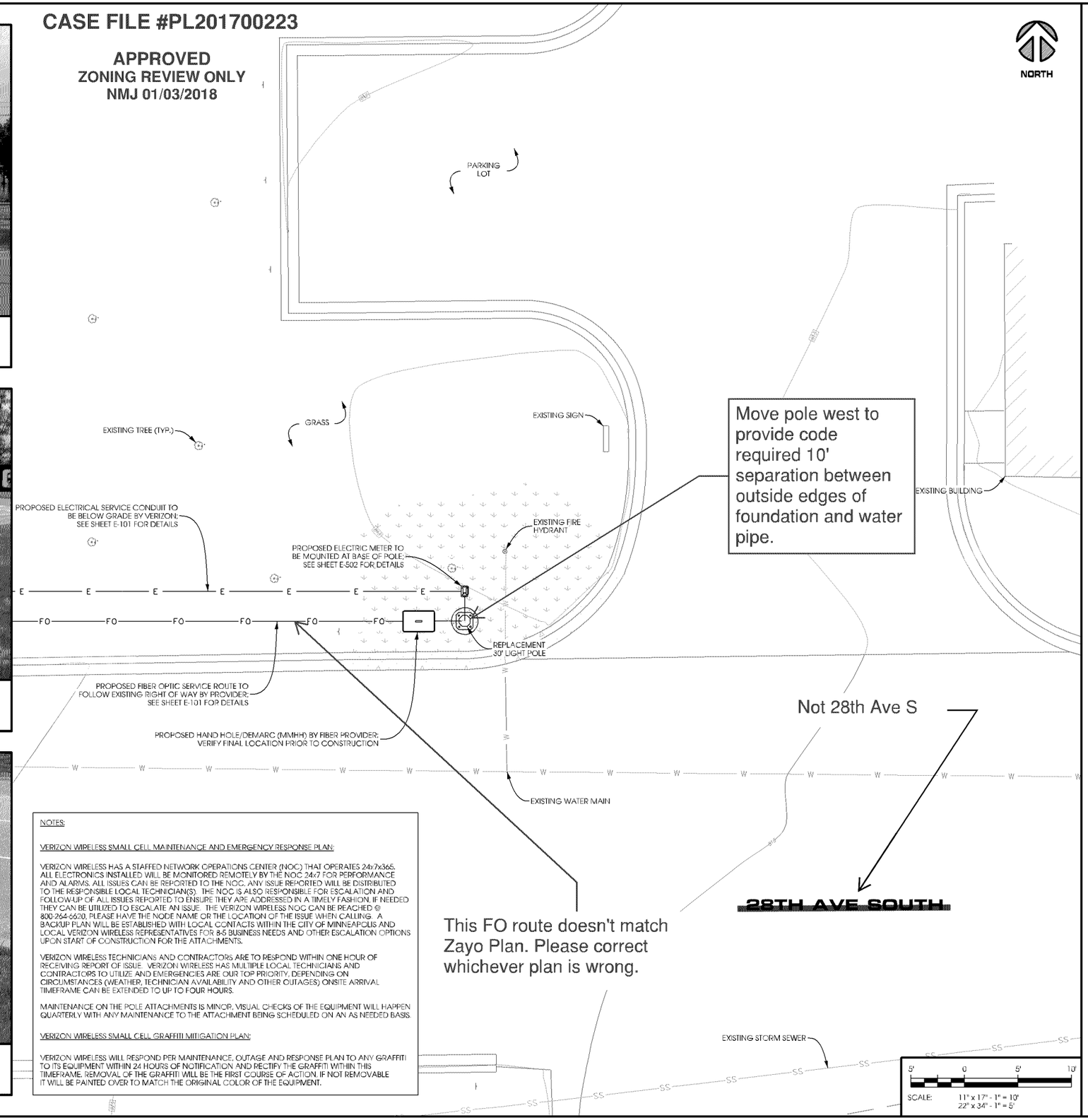

NOTES:

VERIZON WIRELESS SMALL CELL MAINTENANCE AND EMERGENCY RESPONSE PLAN:

VERIZON WIRELESS HAS A STAFFED NETWORK OPERATIONS CENTER (NOC) THAT OPERATES 24x7x365. ALL ELECTRONICS INSTALLED WILL BE MONITORED REMOTELY BY THE NOC 24x7 FOR PERFORMANCE AND ALARMS. ALL ISSUES CAN BE REPORTED TO THE NOC. ANY ISSUE REPORTED WILL BE DISTRIBUTED TO THE RESPONSIBLE LOCAL TECHNICIAN(S). THE NOC IS ALSO RESPONSIBLE FOR ESCALATION AND FOLLOW-UP OF ALL ISSUES REPORTED TO ENSURE THEY ARE ADDRESSED IN A TIMELY FASHION. IF NEEDED THEY CAN BE UTILIZED TO ESCALATE AN ISSUE. THE VERIZON WIRELESS NOC CAN BE REACHED @ 800-264-6620. PLEASE HAVE THE NODE NAME OR THE LOCATION OF THE ISSUE WHEN CALLING. A BACKUP PLAN WILL BE ESTABLISHED WITH LOCAL CONTACTS WITHIN THE CITY OF MINNEAPOLIS AND LOCAL VERIZON WIRELESS REPRESENTATIVES FOR 8-5 BUSINESS NEEDS AND OTHER ESCALATION OPTIONS UPON START OF CONSTRUCTION FOR THE ATTACHMENTS.

VERIZON WIRELESS TECHNICIANS AND CONTRACTORS ARE TO RESPOND WITHIN ONE HOUR OF RECEIVING REPORT OF ISSUE. VERIZON WIRELESS HAS MULTIPLE LOCAL TECHNICIANS AND CONTRACTORS TO UTILIZE AND EMERGENCIES ARE OUR TOP PRIORITY. DEPENDING ON CIRCUMSTANCES (WEATHER, TECHNICIAN AVAILABILITY AND OTHER OUTAGES) ONSITE ARRIVAL TIMEFRAME CAN BE EXTENDED TO UP TO FOUR HOURS.

MAINTENANCE ON THE POLE ATTACHMENTS IS MINOR. VISUAL CHECKS OF THE EQUIPMENT WILL HAPPEN QUARTERLY WITH ANY MAINTENANCE TO THE ATTACHMENT BEING SCHEDULED ON AN AS NEEDED BASIS.

VERIZON WIRELESS SMALL CELL GRAFFITI MITIGATION PLAN:

VERIZON WIRELESS WILL RESPOND PER MAINTENANCE, OUTAGE AND RESPONSE PLAN TO ANY GRAFFITI TO ITS EQUIPMENT WITHIN 24 HOURS OF NOTIFICATION AND RECTIFY THE GRAFFITI WITHIN THIS TIMEFRAME. REMOVAL OF THE GRAFFITI WILL BE THE FIRST COURSE OF ACTION. IF NOT REMOVABLE IT WILL BE PAINTED OVER TO MATCH THE ORIGINAL COLOR OF THE EQUIPMENT.

verizon

ke consulting LLC
3101 Grandview Blvd
Madison, WI 53713
608.516.0233

Edge Consulting Engineers, Inc.
2101 Highway 13 W
Burnsville, MN 55337
608.644.1449 voice
608.644.1549 fax
www.edgeconsult.com

PROJECT NO:	20161462527
LOCATION CODE:	425930
EDGE PROJECT NO:	14967
CHECKED BY:	OGD

REV.	DATE	DESCRIPTION	INT.
A	06/22/2017	PRELIM SMALL CELL DWGS	NAT
B	08/01/2017	PRELIM SMALL CELL DWGS	TTB
C	08/17/2017	PRELIM SMALL CELL DWGS	TTB
0	09/19/2017	FINAL DWGS	DGS

- APPROVED - SEE SHEET G-001 FOR ENGINEER SEAL

I HEREBY CERTIFY THAT THIS PLAN, SPECIFICATION, OR REPORT WAS PREPARED BY ME OR UNDER MY DIRECT SUPERVISION AND THAT I AM A DULY LICENSED PROFESSIONAL ENGINEER UNDER THE LAWS OF THE STATE OF MINNESOTA.

MIN LR 28TH AVE SC1
BLOOMINGTON, MN
REPLACEMENT LIGHT POLE
SMALL CELL DRAWINGS

SHEET TITLE
ENLARGED SITE PLAN

SHEET NUMBER
C-102

L:\14900\14967\CAD\PRJ\CD\C-102.dgn

© EDGE CONSULTING ENGINEERS, INC.

NOTES:

30' SQUARE POLE DESIGN SHOWN. PROPOSED LIGHT POLE TO BE SUPPLIED BY AND PURCHASED BY VERIZON. THE LIGHT POLE TO BE SET BY VERIZON CONTRACTOR AND COORDINATED WITH METRO TRANSIT. PROPOSED POLE TO BE RETROFITTED WITH PROPOSED LIGHT POLE PENETRATION, AND INSTALLED BY CERTIFIED WELDER.

SALVAGE EXISTING POLE AND DELIVER TO METRO TRANSIT. LOCATION TO BE DETERMINED.

NOTES:

TYPICAL INSTALLATION SHOWN.

ALL PROPOSED POLE MOUNTED EQUIPMENT TO BE PAINTED TO MATCH POLE.

ALL POLE PENETRATIONS FOR ANTENNA AND RRU CABLE ROUTING TO BE MINIMIZED.

ALL PROPOSED ELEVATIONS ARE SHOWN ABOVE GROUND LEVEL.

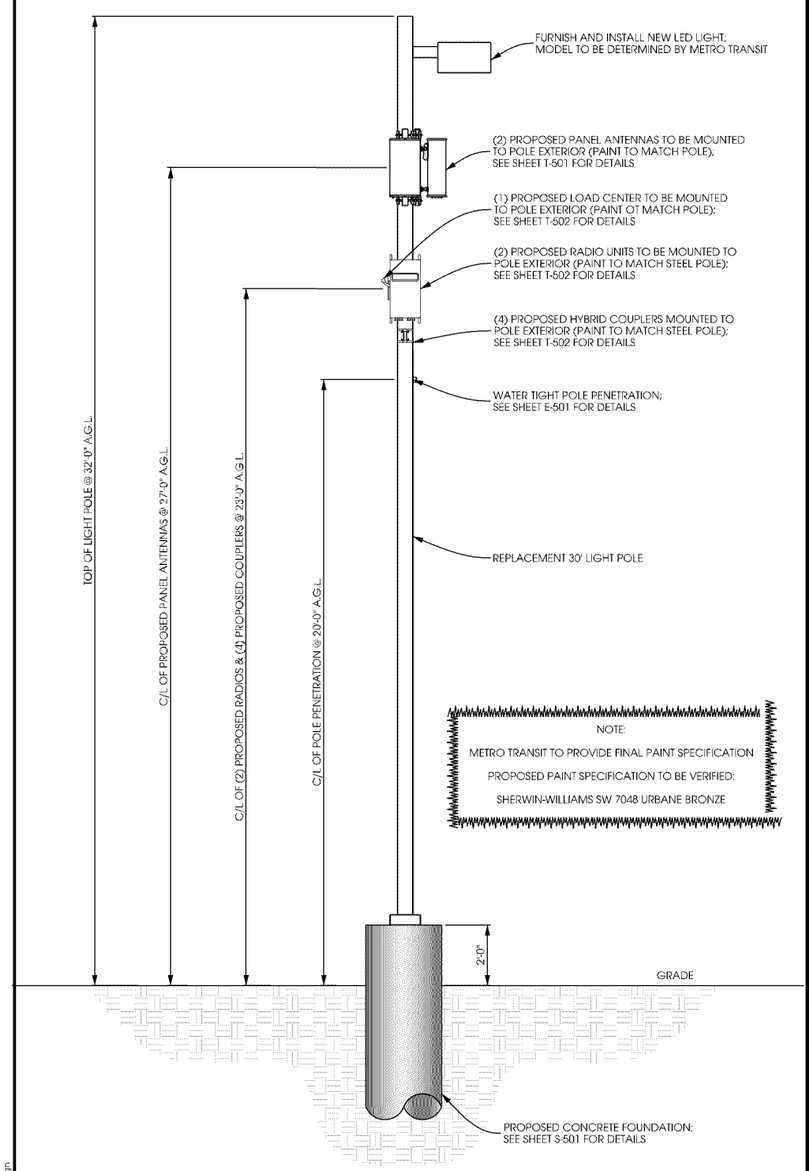

A POLE ELEVATION

SCALE: 11" x 17" - 1" = 5'-0"
22" x 34" - 1" = 2'-6"

B SITE ELEVATION

NORTH

CASE FILE #PL201700223

APPROVED
ZONING REVIEW ONLY
NMJ 01/03/2018

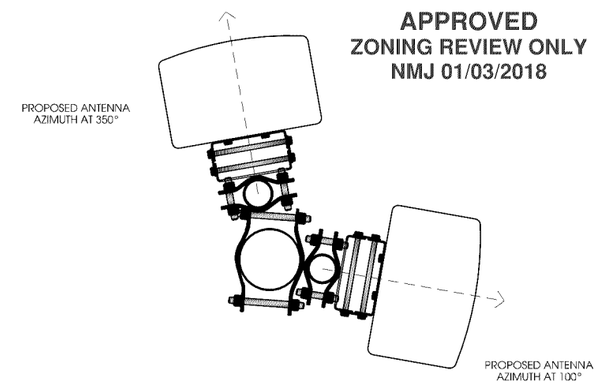

C ANTENNA ORIENTATION

SCALE: NTS

ANTENNAS				
QUANTITY	MAKE	MODEL	CENTERLINE	AZIMUTH
1	COMMSCOPE	HBXX-6513DS-A2M	27'	100°
1	COMMSCOPE	HBXX-6513DS-A2M	27'	350°

EQUIPMENT			
QUANTITY	TYPE	MAKE	MODEL
1	RRU	ERICSSON	RRUS32 B66
1	RRU	ERICSSON	RRUS32 B2
4	COUPLER	CLEARLINK	HC3/698-2.7K/MS/4310

CABLING				
QUANTITY	TYPE	MAKE	MODEL	DIAMETER
16	JUMPER	COMMSCOPE	LFD4-50	1/2"

D ANTENNA AND CABLING

SCALE: NTS

verizon

ke consulting LLC
3101 Grandview Blvd
Madison, WI 53713
608.516.0233

Edge Consulting Engineers, Inc.
2101 Highway 13 W
Burnsville, MN 55337
608.644.1449 voice
608.644.1549 fax
www.edgeconsult.com

PROJECT NO:	20161462527
LOCATION CODE:	425930
EDGE PROJECT NO:	14967
CHECKED BY:	OGD

REV.	DATE	DESCRIPTION	INT.
A	06/22/2017	PRELIM SMALL CELL DWGS	NAT
B	08/01/2017	PRELIM SMALL CELL DWGS	TTB
C	08/17/2017	PRELIM SMALL CELL DWGS	TTB
0	09/19/2017	FINAL DWGS	DGS

- APPROVED -
SEE SHEET G-001 FOR ENGINEER SEAL

I HEREBY CERTIFY THAT THIS PLAN, SPECIFICATION, OR REPORT WAS PREPARED BY ME OR UNDER MY DIRECT SUPERVISION AND THAT I AM A DULY LICENSED PROFESSIONAL ENGINEER UNDER THE LAWS OF THE STATE OF MINNESOTA.

MIN LR 28TH AVE SC1
BLOOMINGTON, MN
REPLACEMENT LIGHT POLE
SMALL CELL DRAWINGS

SHEET TITLE
SITE ELEVATION

SHEET NUMBER
T-201

L:\14967\14967\CAD\Prot\CD\A1T-201.dgn

© EDGE CONSULTING ENGINEERS, INC.

CASE FILE #PL201700223

NOTE:

PAINT ALL ANTENNAS, OUTDOOR EQUIPMENT, CABLING, AND MOUNTING HARDWARE TO MATCH THE POLE

KEYED NOTES:

A. UP TO 8" DIA. POLE

B. REMOTE RADIO UNIT MOUNT (TYP. OF 2); SEE DETAIL B THIS SHEET

C. REMOTE RADIO UNIT (TYP. OF 2); SEE DETAIL C THIS SHEET

D. POWER SUPPLY UNIT SECURED TO BACK OF REMOTE RADIO UNIT (TYP. OF 2); SEE DETAIL D THIS SHEET

E. LOAD CENTER SECURED WITH HEAVY DUTY STAINLESS STEEL BAND STRAP; SEE DETAIL E THIS SHEET

F. DIPLEXER SECURED WITH HEAVY DUTY STAINLESS STEEL BAND STRAP (TYP. OF 2); SEE DETAIL F THIS SHEET

G. ANGLE ADAPTER MOUNTED TO BACK OF REMOTE RADIO UNIT PER MANUFACTURER'S SPECIFICATIONS (TYP.)

H. HEAVY DUTY STAINLESS STEEL BAND STRAP (TYP.)

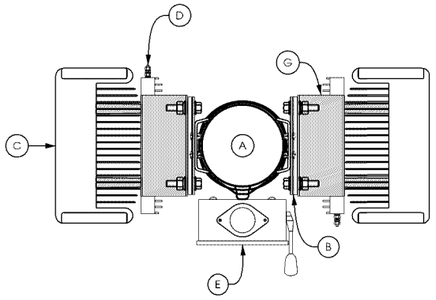

TOP VIEW

APPROVED
ZONING REVIEW ONLY
NMJ 01/03/2018

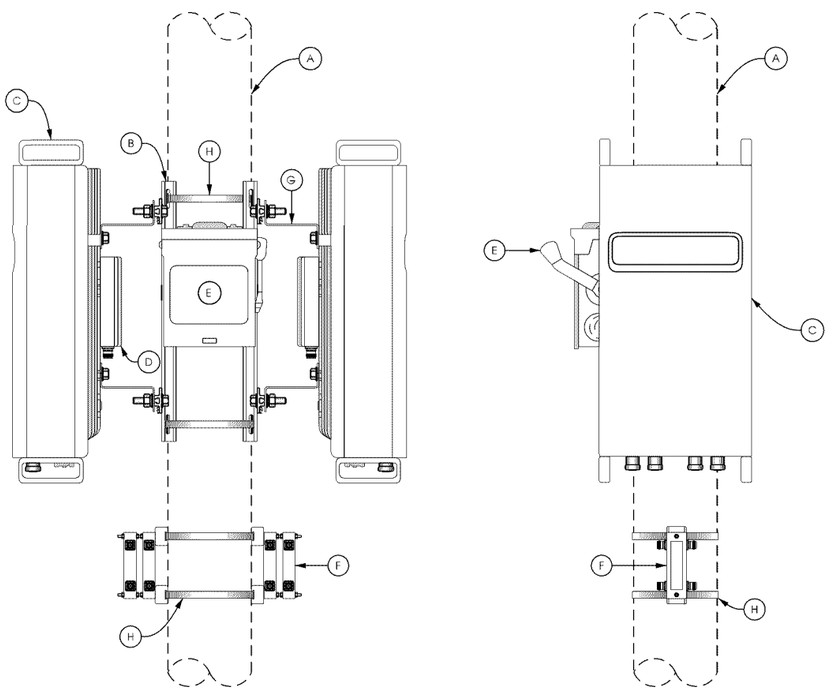

SIDE VIEW

A POLE ELEVATION

SCALE: 11" x 17" - 1/4" = 1'-0"
22" x 34" - 1/2" = 1'-0"

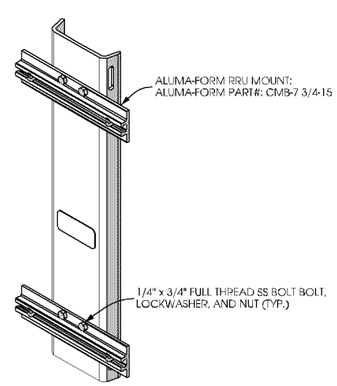

ISOMETRIC VIEW

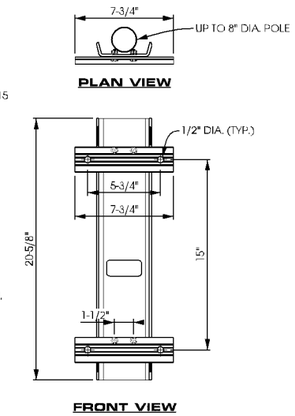

PLAN VIEW

FRONT VIEW

NOTE:

FOR RRU MOUNT AND (2) 3/4" BANDSTRAPS ORDER: ALUMA-FORM PART#: CMB-7 3/4-15 KIT

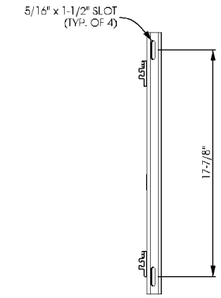

ELEVATION VIEW

B EQUIPMENT MOUNTING

SCALE: NTS

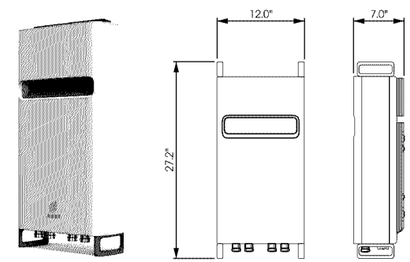

REMOTE RADIO UNIT :

ERICSSON PART # RRUS32

DIMENSIONS: 27.2" x 12.0" x 7.0" (H x W x D)

WEIGHT: 60 LBS

C REMOTE RADIO UNIT

SCALE: NTS

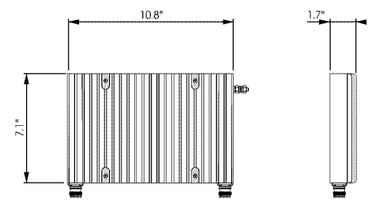

POWER SUPPY UNIT :

ERICSSON PART #: PSU AC-08

DIMENSIONS: 10.8" x 7.1" x 1.9" (H x W x D)

WEIGHT: 11.5 LBS

D POWER SUPPLY UNIT

SCALE: NTS

MANUFACTURER: SCHNEIDER ELECTRIC
MODEL #: SQUARE D DU221RB

NUMBER OF POLES: 2

MAX. CURRENT RATING: 30 A

VOLTAGE RATING: 240 VAC

DIMENSIONS: 9.36" x 7.25" x 3.75"

WEIGHT: 4.62 lbs

CONTRACTOR TO INSTALL LED LIGHT

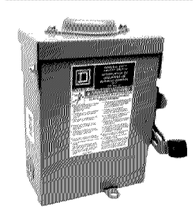

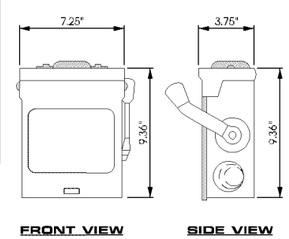

FRONT VIEW

SIDE VIEW

BOTTOM VIEW

E LOAD CENTER

SCALE: NTS

MANUFACTURER: WESTELL
MODEL #: CLEARLINK-HC3/698-2.7K/MS/4310

LOW PIM HYBRID COUPLER FEATURES VERY LOW INSERTION LOSS AND POWER HANDLING CAPABILITY FOR 200 WATTS AVERAGE POWER. COUPLED PORTS ARE 90° OUT OF PHASE AND THE ISOLATED PORT HELPS PROTECT AGAINST MISMATCHED LOADS ON THE COUPLED PORTS.

DIMENSIONS: 5.4" X 1.58" X 0.99"

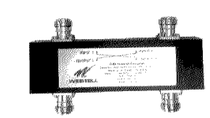

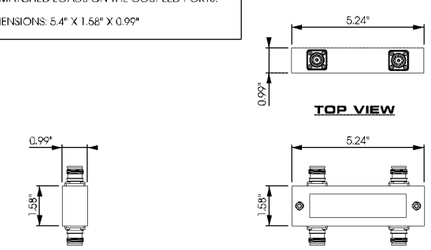

TOP VIEW

SIDE VIEW

FRONT VIEW

F DIPLEXER

SCALE: NTS

verizon

ke consulting LLC
3101 Grandview Blvd
Madison, WI 53713
608.516.0233

Edge Consulting Engineers, Inc.
2101 Highway 13 W
Burnsville, MN 55337
608.644.1449 voice
608.644.1549 fax
www.edgeconsult.com

PROJECT NO:	20161462527
LOCATION CODE:	425930
EDGE PROJECT NO:	14967
CHECKED BY:	OGD

REV.	DATE	DESCRIPTION	INT.
A	06/22/2017	PRELIM SMALL CELL DWGS	NAT
B	08/01/2017	PRELIM SMALL CELL DWGS	TTB
C	08/17/2017	PRELIM SMALL CELL DWGS	TTB
D	09/19/2017	FINAL DWGS	DGS

- APPROVED -
SEE SHEET G-001 FOR ENGINEER SEAL

I HEREBY CERTIFY THAT THIS PLAN, SPECIFICATION, OR REPORT WAS PREPARED BY ME OR UNDER MY DIRECT SUPERVISION AND THAT I AM A DULY LICENSED PROFESSIONAL ENGINEER UNDER THE LAWS OF THE STATE OF MINNESOTA.

MIN LR 28TH AVE SC1
BLOOMINGTON, MN
REPLACEMENT LIGHT POLE
SMALL CELL DRAWINGS

SHEET TITLE
EQUIPMENT DETAILS

SHEET NUMBER
T-502

L:\14900\14967\CAD\Plot\CD\T-502.dgn

© EDGE CONSULTING ENGINEERS, INC.

CASE FILE #PL201700223

verizon

SITE NAME: MIN LR 28TH AVE SC2

SITE NUMBER: 20161462529

LOCATION CODE: 425932

SITE TYPE: SMALL CELL

INSTALLATION TYPE: REPLACEMENT 30' LIGHT POLE

SITE INFORMATION

APPROXIMATE ADDRESS:
30TH AVENUE SOUTH AND
LINDAU LANE
BLOOMINGTON, MINNESOTA 55425
HENNEPIN COUNTY

SITE COORDINATES:
LAT: 44°-51'-22.69"N
LONG: 93°-13'-48.51"W
GROUND ELEVATION: 817.0' AMSL
(PER 1A CERTIFICATE)

POLE HEIGHT:
30'-0" T.O.C.

MAXIMUM APPURTENANCE HEIGHT:
30'-0" A.G.L.

AREA MAP

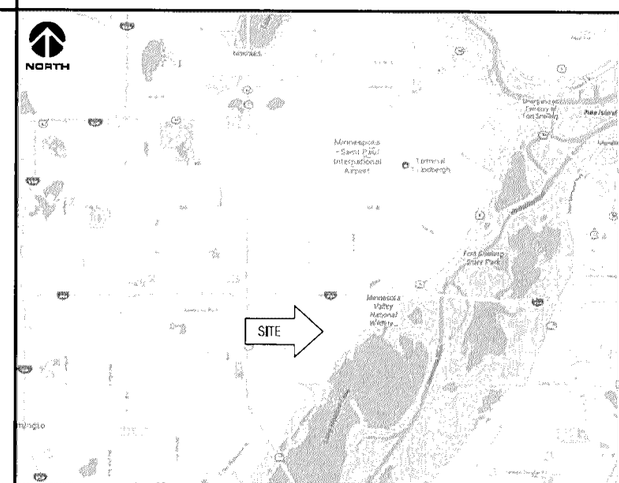

LOCATION MAP

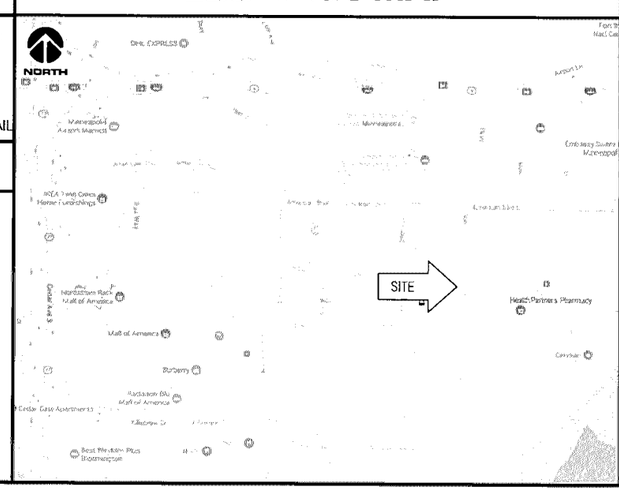

APPLICABLE CODES

ALL WORK SHALL COMPLY WITH THE FOLLOWING APPLICABLE CODES:

- 2012 INTERNATIONAL BUILDING CODE
- 2014 NATIONAL ELECTRIC CODE
- TIA/EIA-222-G OR LATEST EDITION

IN THE EVENT OF CONFLICT, THE MOST RESTRICTIVE CODE SHALL PREVAIL

LOCATION SCAN

PROJECT DESCRIPTION/SOW

- INSTALL (1) REPLACEMENT 30-FT STEEL LIGHT POLE AND ASSOCIATED CONCRETE FOUNDATION
- INSTALLATION OF PANEL ANTENNAS
- INSTALLATION OF ERICSSON RRU'S AND POWER CONVERTERS
- INSTALLATION OF LOAD CENTER
- INSTALLATION OF HYBRID COUPLERS
- INSTALLATION OF HAND HOLE FOR FIBER NEAR POLE BASE BY PROVIDER
- INSTALLATION OF CONDUIT FOR FIBER BETWEEN HAND HOLE AND POLE BASE BELOW GRADE BY VERIZON
- INSTALLATION OF CONDUIT FOR FIBER BETWEEN HAND HOLE AND ROW BELOW GRADE BY PROVIDER
- INSTALLATION OF GROUND RODS AROUND POLE FOUNDATION
- INSTALLATION OF CONDUIT FOR NEW ELECTRIC SERVICE BY VERIZON
- ALL OTHER CONSTRUCTION RELATED ACTIVITIES TO BE COMPLETED BY OTHERS

PROJECT DIRECTORY

LESSEE:
VERIZON WIRELESS
10801 BUSH LAKE RD
BLOOMINGTON, MN 55438
CONTACT: COURTNEY BEDNARZ
PHONE: 952.946.4694

SITE ACQUISITION:
KE CONSULTING, LLC
3101 GRANDVIEW BLVD
MADISON, WI 53713
CONTACT: KIM A. EGAN
PHONE: 608.516.0233

LESSOR:
METRO TRANSIT
560 SIXTH AVENUE NORTH
MINNEAPOLIS, MN 55411
PHONE: 612.373.3333

RF ENGINEER:
VERIZON WIRELESS
10801 BUSH LAKE RD
BLOOMINGTON, MN 55438
CONTACT: JOHN MULLINS
PHONE: 612.791.1710

ENGINEERING COMPANY:
EDGE CONSULTING ENGINEERS, INC.
2101 HIGHWAY 13 W
BURNSVILLE, MN 55337
CONTACT: OTTO DINGFELDER III, P.E.
PHONE: 608.644.1449

SHEET INDEX

NO:	SHEET TITLE
G-001	TITLE SHEET & PROJECT DATA
G-002	GENERAL SPECIFICATIONS
G-003	GENERAL SPECIFICATIONS
G-004	METRO TRANSIT SITE REQUIREMENTS*
G-005	METRO TRANSIT SITE REQUIREMENTS*
C-101	SITE PLAN
C-102	ENLARGED SITE PLAN
T-201	SITE ELEVATION
T-501	ANTENNA DETAILS
T-502	EQUIPMENT DETAILS
S-001	STRUCTURAL NOTES **
S-501	STRUCTURAL DETAILS **
E-101	UTILITY PLAN
E-102	GROUNDING PLAN
E-501	UTILITY DETAILS
E-502	UTILITY DETAILS
E-503	GROUNDING DETAILS

* COMPLETED BY OTHERS
** REVIEWED AND APPROVED BY STRUCTURAL ENGINEER

11"x17" PLOT WILL BE HALF SCALE UNLESS OTHERWISE NOTED

CONTRACTOR SHALL VERIFY ALL PLANS AND EXISTING DIMENSIONS/CONDITIONS ON SITE. IMMEDIATELY NOTIFY ENGINEER OF ANY DISCREPANCIES PRIOR TO PERFORMING ANY WORK OR BE RESPONSIBLE FOR THE SAME.

ENGINEER OF RECORD

EDGE CONSULTING ENGINEERS, INC.
CONTACT: OTTO DINGFELDER III (PE # 49720 (MN))
PHONE: 608.644.1449

STRUCTURAL REVIEW

COMPLETED BY:
EDGE CONSULTING ENGINEERS, INC.
PROJECT #: 15116
DATE: 09/19/2017

CONTRACTOR TO REVIEW STRUCTURAL REPORT IN ITS ENTIRETY. ANY DISCREPANCIES OR DISAGREEMENTS BETWEEN THE REPORT AND THESE PLANS SHOULD BE RESOLVED PRIOR TO CONSTRUCTION.

verizon

ke consulting LLC
3101 Grandview Blvd
Madison, WI 53713
608.516.0233

Edge
Consulting Engineers, Inc.
2101 Highway 13 W
Burnsville, MN 55337
608.644.1449 voice
608.644.1549 fax
www.edgeconsult.com

PROJECT NO:	20161462529
LOCATION CODE:	425932
EDGE PROJECT NO:	15116
CHECKED BY:	OGD

REV.	DATE	DESCRIPTION	INT.
A	06/22/2017	PRELIM SMALL CELL DWGS	NAT
B	08/01/2017	PRELIM SMALL CELL DWGS	TTB
C	08/17/2017	PRELIM SMALL CELL DWGS	TTB
0	09/19/2017	FINAL DWGS	DGS

OTTO G. DINGFELDER
LICENSED PROFESSIONAL ENGINEER
49720
STATE OF MINNESOTA
9/20/2017

I HEREBY CERTIFY THAT THIS PLAN, SPECIFICATION, OR REPORT WAS PREPARED BY ME OR UNDER MY DIRECT SUPERVISION AND THAT I AM A DULY LICENSED PROFESSIONAL ENGINEER UNDER THE LAWS OF THE STATE OF MINNESOTA.

MIN LR 28TH AVE SC2
BLOOMINGTON, MN
REPLACEMENT LIGHT POLE
SMALL CELL DRAWINGS

SHEET TITLE
TITLE SHEET & PROJECT DATA

SHEET NUMBER
G-001

J:\15100\15116\CAD\Pro\CDA\G-001.dgn

© EDGE CONSULTING ENGINEERS, INC.

CASE FILE #PL201700223

APPROVED
ZONING REVIEW ONLY
NMJ 01/03/2018

A AERIAL OVERVIEW

B SITE OVERVIEW (LOOKING WEST)

C EXISTING POWER SOURCE

L:\15100\15116\CAD\Plot\CD\G-101.dgn

verizon

ke consulting LLC
3101 Grandview Blvd
Madison, WI 53713
608.516.0233

Edge
Consulting Engineers, Inc.
2101 Highway 13 W
Burnsville, MN 55337
608.644.1449 voice
608.644.1549 fax
www.edgeconsult.com

PROJECT NO:	20161462529
LOCATION CODE:	425932
EDGE PROJECT NO:	15116
CHECKED BY:	OGD

REV.	DATE	DESCRIPTION	INT.
A	06/22/2017	PRELIM SMALL CELL DWGS	NAT
B	08/01/2017	PRELIM SMALL CELL DWGS	TTB
C	08/17/2017	PRELIM SMALL CELL DWGS	TTB
D	09/19/2017	FINAL DWGS	DGS

- APPROVED -
SEE SHEET G-001 FOR
ENGINEER SEAL

I HEREBY CERTIFY THAT THIS PLAN, SPECFICATION, OR REPORT WAS PREPARED BY ME OR UNDER MY DIRECT SUPERVISION AND THAT I AM A DULY LICENSED PROFESSIONAL ENGINEER UNDER THE LAWS OF THE STATE OF MINNESOTA.

MIN LR 28TH AVE SC2
BLOOMINGTON, MN
REPLACEMENT LIGHT POLE
SMALL CELL DRAWINGS

SHEET TITLE

SITE PLAN

SHEET NUMBER

C-101

© EDGE CONSULTING ENGINEERS, INC.

CASE FILE #PL201700223

A — SITE OVERVIEW [LOOKING WEST]

B — SITE OVERVIEW [LOOKING EAST]

C — PROPOSED HAND HOLE LOCATION

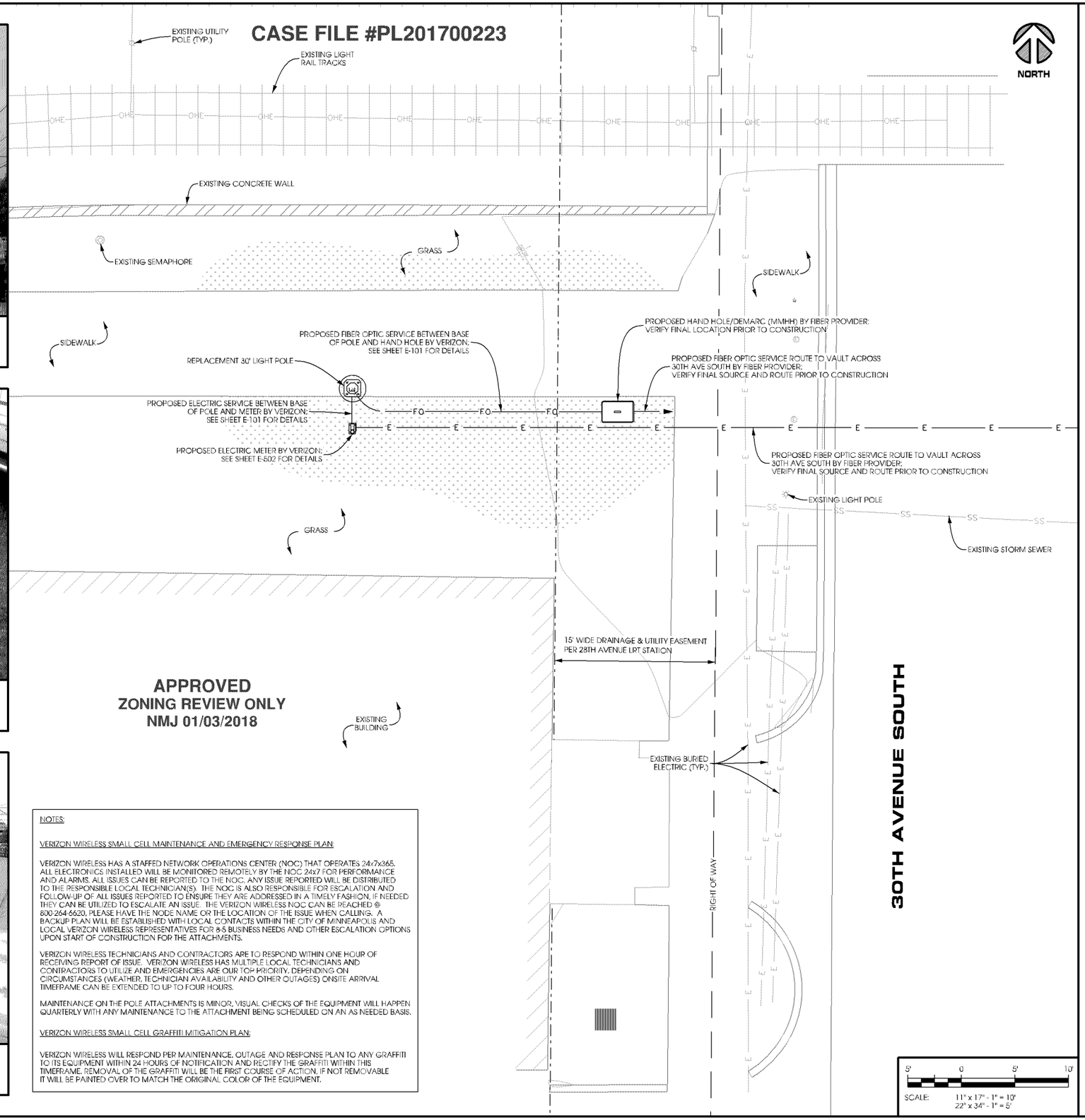

APPROVED
ZONING REVIEW ONLY
NMJ 01/03/2018

NOTES:

VERIZON WIRELESS SMALL CELL MAINTENANCE AND EMERGENCY RESPONSE PLAN:

VERIZON WIRELESS HAS A STAFFED NETWORK OPERATIONS CENTER (NOC) THAT OPERATES 24x7x365. ALL ELECTRONICS INSTALLED WILL BE MONITORED REMOTELY BY THE NOC 24x7 FOR PERFORMANCE AND ALARMS. ALL ISSUES CAN BE REPORTED TO THE NOC. ANY ISSUE REPORTED WILL BE DISTRIBUTED TO THE RESPONSIBLE LOCAL TECHNICIAN(S). THE NOC IS ALSO RESPONSIBLE FOR ESCALATION AND FOLLOW-UP OF ALL ISSUES REPORTED TO ENSURE THEY ARE ADDRESSED IN A TIMELY FASHION. IF NEEDED THEY CAN BE UTILIZED TO ESCALATE AN ISSUE. THE VERIZON WIRELESS NOC CAN BE REACHED @ 800-264-6620. PLEASE HAVE THE NODE NAME OR THE LOCATION OF THE ISSUE WHEN CALLING. A BACKUP PLAN WILL BE ESTABLISHED WITH LOCAL CONTACTS WITHIN THE CITY OF MINNEAPOLIS AND LOCAL VERIZON WIRELESS REPRESENTATIVES FOR 8-5 BUSINESS NEEDS AND OTHER ESCALATION OPTIONS UPON START OF CONSTRUCTION FOR THE ATTACHMENTS.

VERIZON WIRELESS TECHNICIANS AND CONTRACTORS ARE TO RESPOND WITHIN ONE HOUR OF RECEIVING REPORT OF ISSUE. VERIZON WIRELESS HAS MULTIPLE LOCAL TECHNICIANS AND CONTRACTORS TO UTILIZE AND EMERGENCIES ARE OUR TOP PRIORITY. DEPENDING ON CIRCUMSTANCES (WEATHER, TECHNICIAN AVAILABILITY AND OTHER OUTAGES) ONSITE ARRIVAL TIMEFRAME CAN BE EXTENDED TO UP TO FOUR HOURS.

MAINTENANCE ON THE POLE ATTACHMENTS IS MINOR, VISUAL CHECKS OF THE EQUIPMENT WILL HAPPEN QUARTERLY WITH ANY MAINTENANCE TO THE ATTACHMENT BEING SCHEDULED ON AN AS NEEDED BASIS.

VERIZON WIRELESS SMALL CELL GRAFFITI MITIGATION PLAN:

VERIZON WIRELESS WILL RESPOND PER MAINTENANCE, OUTAGE AND RESPONSE PLAN TO ANY GRAFFITI TO ITS EQUIPMENT WITHIN 24 HOURS OF NOTIFICATION AND RECTIFY THE GRAFFITI WITHIN THIS TIMEFRAME. REMOVAL OF THE GRAFFITI WILL BE THE FIRST COURSE OF ACTION, IF NOT REMOVABLE IT WILL BE PAINTED OVER TO MATCH THE ORIGINAL COLOR OF THE EQUIPMENT.

5' 0 5' 10'
SCALE: 11" x 17" - 1" = 10'
22" x 34" - 1" = 5'

verizon

ke consulting LLC
3101 Grandview Blvd
Madison, WI 53713
608.516.0233

Edge Consulting Engineers, Inc.
2101 Highway 13 W
Burnsville, MN 55337
608.644.1449 voice
608.644.1549 fax
www.edgeconsult.com

PROJECT NO:	20161462529
LOCATION CODE:	425932
EDGE PROJECT NO:	15116
CHECKED BY:	OGD

REV.	DATE	DESCRIPTION	INT.
A	06/22/2017	PRELIM SMALL CELL DWGS	NAT
B	08/01/2017	PRELIM SMALL CELL DWGS	TTB
C	08/17/2017	PRELIM SMALL CELL DWGS	TTB
0	09/19/2017	FINAL DWGS	DGS

- APPROVED - SEE SHEET G-001 FOR ENGINEER SEAL

I HEREBY CERTIFY THAT THIS PLAN, SPECIFICATION, OR REPORT WAS PREPARED BY ME OR UNDER MY DIRECT SUPERVISION AND THAT I AM A DULY LICENSED PROFESSIONAL ENGINEER UNDER THE LAWS OF THE STATE OF MINNESOTA.

MIN LR 28TH AVE SC2
BLOOMINGTON, MN
REPLACEMENT LIGHT POLE
SMALL CELL DRAWINGS

SHEET TITLE
ENLARGED SITE PLAN

SHEET NUMBER
C-102

L:\15100\15116\CAD\Plot\CDS\C-102.dgn

© EDGE CONSULTING ENGINEERS, INC.

NOTES:

30' SQUARE POLE DESIGN SHOWN. PROPOSED LIGHT POLE TO BE SUPPLIED BY AND PURCHASED BY VERIZON. THE LIGHT POLE TO BE SET BY VERIZON CONTRACTOR AND COORDINATED WITH METRO TRANSIT. PROPOSED POLE TO BE RETROFITTED WITH PROPOSED LIGHT POLE PENETRATION, AND INSTALLED BY CERTIFIED WELDER.

SALVAGE EXISTING POLE AND DELIVER TO METRO TRANSIT. LOCATION TO BE DETERMINED.

NOTES:

TYPICAL INSTALLATION SHOWN.

ALL PROPOSED POLE MOUNTED EQUIPMENT TO BE PAINTED TO MATCH POLE.

ALL POLE PENETRATIONS FOR ANTENNA AND RRU CABLE ROUTING TO BE MINIMIZED.

ALL PROPOSED ELEVATIONS ARE SHOWN ABOVE GROUND LEVEL.

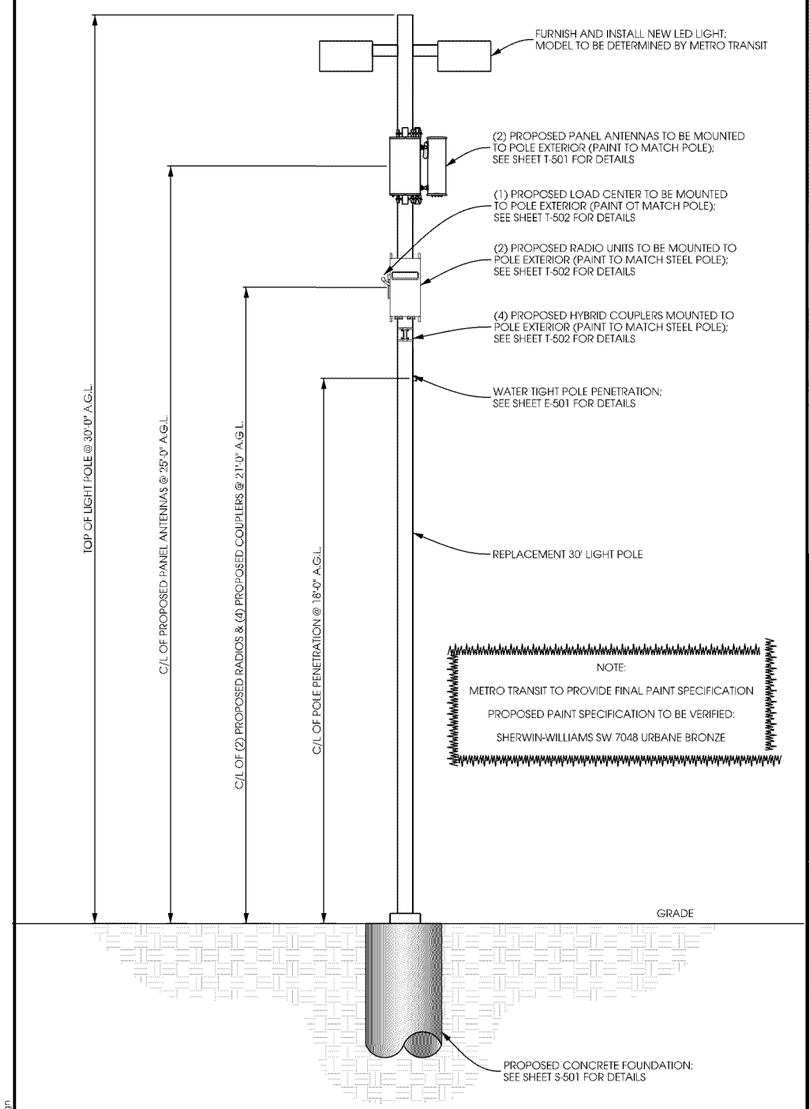

NOTE:
METRO TRANSIT TO PROVIDE FINAL PAINT SPECIFICATION
PROPOSED PAINT SPECIFICATION TO BE VERIFIED:
SHERWIN-WILLIAMS SW 7048 URBANE BRONZE

A POLE ELEVATION

SCALE: 11" x 17" - 1" = 5'-0"
22" x 34" - 1" = 2'-6"

B SITE ELEVATION

NORTH

CASE FILE #PL201700223

APPROVED
ZONING REVIEW ONLY
NMJ 01/03/2018

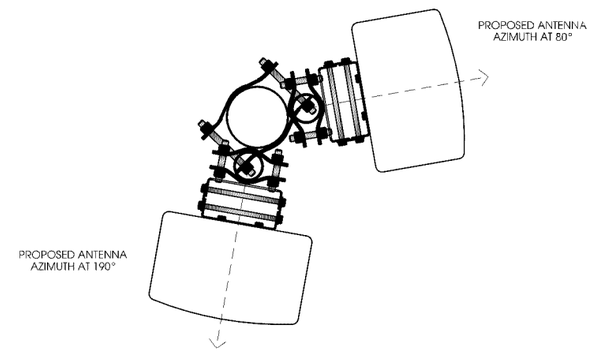

C ANTENNA ORIENTATION

SCALE: NTS

ANTENNAS				
QUANTITY	MAKE	MODEL	CENTERLINE	AZIMUTH
1	COMMSCOPE	HBXX-6513DS-A2M	25'	80°
1	COMMSCOPE	HBXX-6513DS-A2M	25'	190°

EQUIPMENT			
QUANTITY	TYPE	MAKE	MODEL
1	RRU	ERICSSON	RRUS32 B66
1	RRU	ERICSSON	RRUS32 B2
4	COUPLER	CLEARLINK	HC3-698-2.7K/MS/4310

CABLING				
QUANTITY	TYPE	MAKE	MODEL	DIAMETER
16	JUMPER	COMMSCOPE	LFD4-50	1/2"

D ANTENNA AND CABLING

SCALE: NTS

verizon

ke consulting LLC
3101 Grandview Blvd
Madison, WI 53713
608.516.0233

Edge Consulting Engineers, Inc.
2101 Highway 13 W
Burnsville, MN 55337
608.644.1449 voice
608.644.1549 fax
www.edgeconsult.com

PROJECT NO:	20161462529
LOCATION CODE:	425932
EDGE PROJECT NO:	15116
CHECKED BY:	OGD

REV.	DATE	DESCRIPTION	INT.
A	06/22/2017	PRELIM SMALL CELL DWGS	NAT
B	08/01/2017	PRELIM SMALL CELL DWGS	TTB
C	08/17/2017	PRELIM SMALL CELL DWGS	TTB
D	09/19/2017	FINAL DWGS	DGS

- APPROVED -
SEE SHEET G-001 FOR ENGINEER SEAL

I HEREBY CERTIFY THAT THIS PLAN, SPECIFICATION, OR REPORT WAS PREPARED BY ME OR UNDER MY DIRECT SUPERVISION AND THAT I AM A DULY LICENSED PROFESSIONAL ENGINEER UNDER THE LAWS OF THE STATE OF MINNESOTA.

MIN LR 28TH AVE SC2
BLOOMINGTON, MN
REPLACEMENT LIGHT POLE
SMALL CELL DRAWINGS

SHEET TITLE
SITE ELEVATION

SHEET NUMBER
T-201

L:\15100\16116\CAD\Pol\CD\T-201.dgn

© EDGE CONSULTING ENGINEERS, INC.

CASE FILE #PL201700223

APPROVED
ZONING REVIEW ONLY
NMJ 01/03/2018

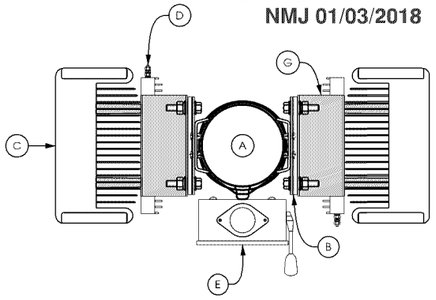

TOP VIEW

NOTE:

PAINT ALL ANTENNAS, OUTDOOR EQUIPMENT, CABLING, AND MOUNTING HARDWARE TO MATCH THE POLE

KEYED NOTES:

A. UP TO 8" DIA. POLE

B. REMOTE RADIO UNIT MOUNT (TYP. OF 2); SEE DETAIL B THIS SHEET

C. REMOTE RADIO UNIT (TYP. OF 2); SEE DETAIL C THIS SHEET

D. POWER SUPPLY UNIT SECURED TO BACK OF REMOTE RADIO UNIT (TYP. OF 2); SEE DETAIL D THIS SHEET

E. LOAD CENTER SECURED WITH HEAVY DUTY STAINLESS STEEL BAND STRAP; SEE DETAIL E THIS SHEET

F. DIPLEXER SECURED WITH HEAVY DUTY STAINLESS STEEL BAND STRAP (TYP. OF 2); SEE DETAIL F THIS SHEET

G. ANGLE ADAPTER MOUNTED TO BACK OF REMOTE RADIO UNIT PER MANUFACTURER'S SPECIFICATIONS (TYP.)

H. HEAVY DUTY STAINLESS STEEL BAND STRAP (TYP.)

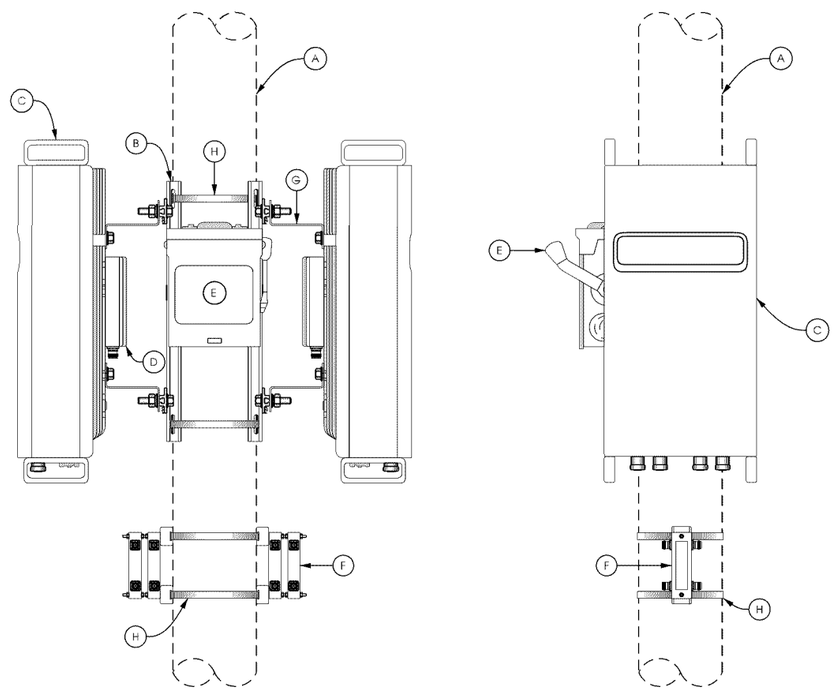

SIDE VIEW

A POLE ELEVATION

SCALE: 11" x 17" - 1/4" = 1'-0"
22" x 34" - 1/2" = 1'-0"

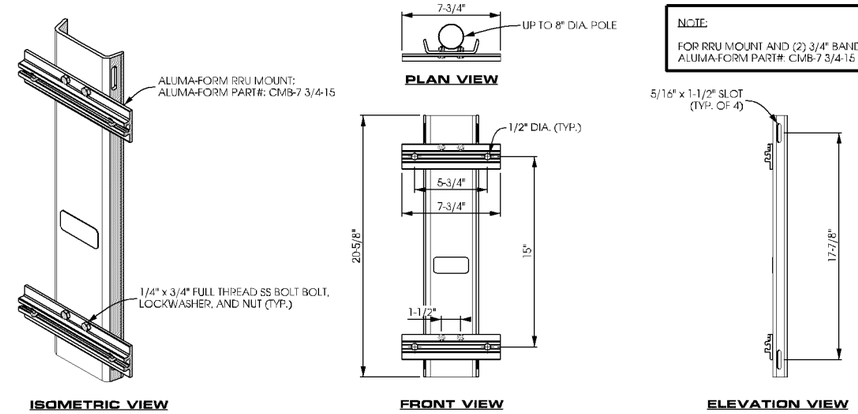

ISOMETRIC VIEW

PLAN VIEW

FRONT VIEW

ELEVATION VIEW

NOTE:

FOR RRU MOUNT AND (2) 3/4" BANDSTRAPS ORDER: ALUMA-FORM PART#: CMB-7 3/4-15 KIT

B EQUIPMENT MOUNTING

SCALE: NTS

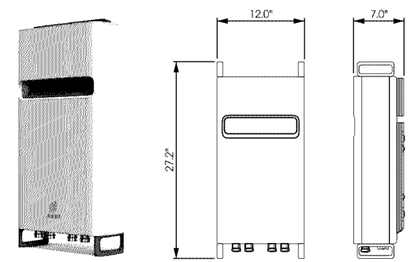

REMOTE RADIO UNIT :

ERICSSON PART # RRUS32

DIMENSIONS: 27.2" x 12.0" x 7.0" (H x W x D)

WEIGHT: 60 LBS

C REMOTE RADIO UNIT

SCALE: NTS

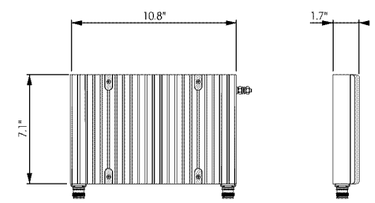

POWER SUPPY UNIT :

ERICSSON PART #: PSU AC-08

DIMENSIONS: 10.8" x 7.1" x 1.9" (H x W x D)

WEIGHT: 11.5 LBS

D POWER SUPPLY UNIT

SCALE: NTS

MANUFACTURER: SCHNEIDER ELECTRIC
MODEL #: SQUARE D DU221RB

NUMBER OF POLES: 2

MAX. CURRENT RATING: 30 A

VOLTAGE RATING: 240 VAC

DIMENSIONS: 9.36" x 7.25" x 3.75"

WEIGHT: 4.62 lbs

CONTRACTOR TO INSTALL LED LIGHT

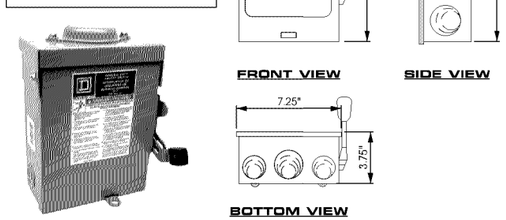

FRONT VIEW

SIDE VIEW

BOTTOM VIEW

E LOAD CENTER

SCALE: NTS

MANUFACTURER: WESTELL
MODEL #: CLEARLINK-HC3/698-2.7K/MS/4310

LOW PIM HYBRID COUPLER FEATURES VERY LOW INSERTION LOSS AND POWER HANDLING CAPABILITY FOR 200 WATTS AVERAGE POWER. COUPLED PORTS ARE 90° OUT OF PHASE AND THE ISOLATED PORT HELPS PROTECT AGAINST MISMATCHED LOADS ON THE COUPLED PORTS.

DIMENSIONS: 5.4" X 1.58" X 0.99"

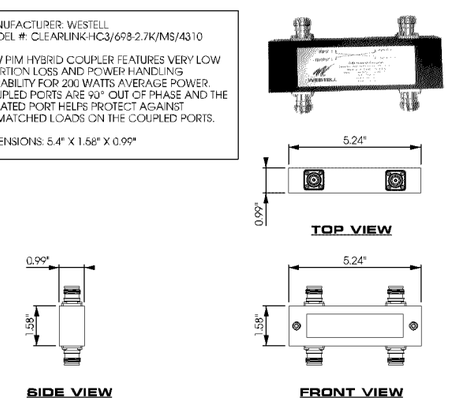

TOP VIEW

SIDE VIEW

FRONT VIEW

F DIPLEXER

SCALE: NTS

verizon

ke consulting LLC
3101 Grandview Blvd
Madison, WI 53713
608.516.0233

Edge Consulting Engineers, Inc.
2101 Highway 13 W
Burnsville, MN 55337
608.644.1449 voice
608.644.1549 fax
www.edgeconsult.com

PROJECT NO:	20161462529
LOCATION CODE:	425932
EDGE PROJECT NO:	15116
CHECKED BY:	OGD

REV.	DATE	DESCRIPTION	INT.
A	06/22/2017	PRELIM SMALL CELL DWGS	NAT
B	08/01/2017	PRELIM SMALL CELL DWGS	TTB
C	08/17/2017	PRELIM SMALL CELL DWGS	TTB
D	09/19/2017	FINAL DWGS	DGS

- APPROVED -
SEE SHEET G-001 FOR ENGINEER SEAL

I HEREBY CERTIFY THAT THIS PLAN, SPECIFICATION, OR REPORT WAS PREPARED BY ME OR UNDER MY DIRECT SUPERVISION AND THAT I AM A DULY LICENSED PROFESSIONAL ENGINEER UNDER THE LAWS OF THE STATE OF MINNESOTA.

MIN LR 28TH AVE SC2
BLOOMINGTON, MN
REPLACEMENT LIGHT POLE
SMALL CELL DRAWINGS

SHEET TITLE
EQUIPMENT DETAILS

SHEET NUMBER
T-502

L:\15100\15116\CAD\Plot\CDs\T-502.dgn

© EDGE CONSULTING ENGINEERS, INC.